Amarex N

Submersible motor pumps

Type series	**Amarex N**
Size	**2” (DN 50)** **...** **4” (DN 100)**
Motor size	**002 ... 042 (2 poles)** **004 ... 044 (4 poles)** **DKN 82 and 92 series**
Material types	**G, G1, G2, GH**

Serial No.: see name plate

Dear Customer,
Thank you for your recent purchase of a modern submersible motor pump, type Amarex N, from KSB.

The safety instructions to be observed for installation, operation, maintenance and servicing of the pump set are marked with the following symbols:

General hazard sign to ISO 3864-B-3-1 for hazards to persons.

Hazard sign to ISO 3864-B-3-6 for electrical hazards

Caution This word is used to introduce safety instructions. Non-observance to those instructions may lead to damage to the machine and its functions.

Contents

		Page
1	General	2
2	Safety	2
3	Transport	3
4	Description of the product and accessories	3
5	Installation at site	4
6	Commissioning, start-up / Shutdown	7
7	Service and maintenance	7
8	Trouble-shooting	12
9	Annex	14

KSB

1 General

This KSB pump set has been developed in accordance with state-of-the-art technology; it is manufactured with utmost care and subject to continuous quality control.
These operating instructions contain important information for reliable and safe operation of the pump.
This pump set must not be operated outside its specified operating range. The limits stated in the documentation must not be exceeded under any circumstances.
Non-compliance with this operating manual will lead to forfeiture of any and all rights to claims for damages.
If you need any additional information or instructions exceeding the scope of this manual or in case of damage please contact KSB's nearest customer service center.

2 Safety

2.1 Safety instructions

Non-compliance with the safety instructions laid down in this chapter on "Safety" and other chapters of this operating manual may result in hazards to persons and damage to property for the operator and/or third parties.
Notes on using the operating manual:

- All personnel involved in the assembly, installation and maintenance of the unit must be **thoroughly familiar with these operating instructions.**
- The operating manual must always be kept close to the location of operation of the machine for easy access.

2.2 Personnel qualification and training

All personnel involved in the operation, maintenance, inspection and installation of the unit must be fully qualified to carry out the work involved. The operator is responsible for assigning personnel and providing appropriate training and instruction. The operator may commission the manufacturer / supplier to take care of such training. In addition, the operator is responsible for ensuring that the instructions of this operating manual are observed.

2.3 Compliance with statutory safety requirements

These operating instructions do not take into account local regulations; responsibility for compliance with such regulations lies with the operator.
Small children and persons who are mentally or physically unable to comply with the safety regulations shall be kept away from the pump.

2.4 Safety instructions for work on the machine

Work on the machine / unit must be carried out only during standstill. The shutdown procedure described in the manual for taking the unit out of service must be adhered to without fail (section 7).
Pump sets handling liquids posing health hazards must be decontaminated.
Immediately following completion of the work, all safety-relevant and protective devices must be re-installed and / or re-activated. The instructions given in section 6 shall be adhered to.

⚠ If the pump/unit is located in a potentially explosive atmosphere, it is imperative to make sure that any operation of the unit outside its design data and operating limits is absolutely prevented. Non-compliance with this requirement may result in the given temperature classes being exceeded, sparking, leakage of explosive mixtures and therefore explosions.

- Make sure to prevent dust from collecting in hazardous amounts on the unit, especially in areas of high surface temperature.

2.5 Repair and modification work

Repair and modification work on the pump set are only permitted after consultation with the manufacturer. Original spare parts and accessories authorized by the manufacturer ensure safety.
The use of other parts will lead to forfeiture of any and all rights to warranty claims.

2.6 Explosion protection

Special conditions apply to the operation of explosion-proof pumps. The explosion-proof status of the pump set is only assured if the pump set is used in accordance with its designated use. The limits stated in the data sheet and on the name plate must not be exceeded under any circumstances. Correct monitoring of the motor temperature is imperative to ensure explosion protection.
Electrical connection plans and function diagrams are given in the Annex. Never operate an explosion-proof pump without monitoring the stator temperature. Modifications or alteration of the pump may affect explosion protection and are only permitted after consultation with the manufacturer. Only original spare parts and accessories authorized by the manufacturer must be used for explosion-proof pumps.

⚠ Special regulation apply to repair work on explosion-proof pumps. Modifications or alteration of the pump may affect explosion protection and are only permitted after consultation with the manufacturer. Only original spare parts and accessories authorized by the manufacturer must be used for explosion-proof pumps.

3 Transport

- Any handling tackle included in the scope of supply must only be used for pump installation.
- Lifting equipment not intended for overhead lifting.
- **Do not suspend the pump by the motor cable.**
- Transport of the pumps requires proper preparation and handling.
- The handling chain / rope must be safely attached to the pump and the lifting crane.
- Always use the pump handle (see drawing below).
- KSB chains must only be used to lift/lower and transport KSB pumps.

4 Description of the product and accessories

4.1 General Description

KSB submersible motor pumps are floodable, close-coupled units which are not self-priming. They are available with various impeller types matched to the application in question. The pumps are usually operated completely submerged. They may be operated outside the fluid for short periods of time, until the minimum liquid level stipulated by KSB (R1, see dimension tables, p. 16–22) has been reached.

4.2 Identification Data

The exact pump type is shown on the name plate. Please quote the name plate data in all queries, repeat orders and particularly when ordering spare parts.

Name plate YLG FM

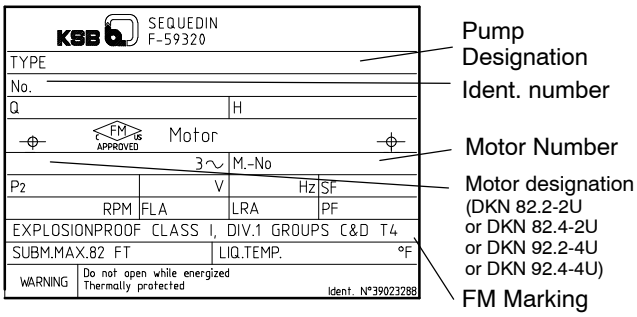

Name plate WLG

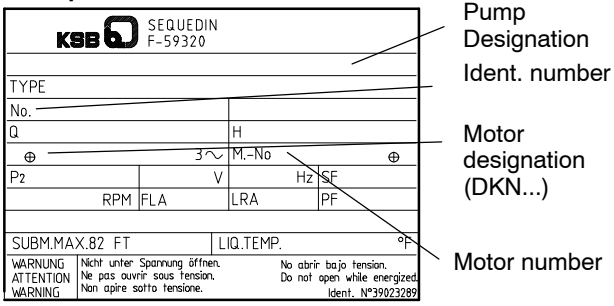

Name plate YLG CSA

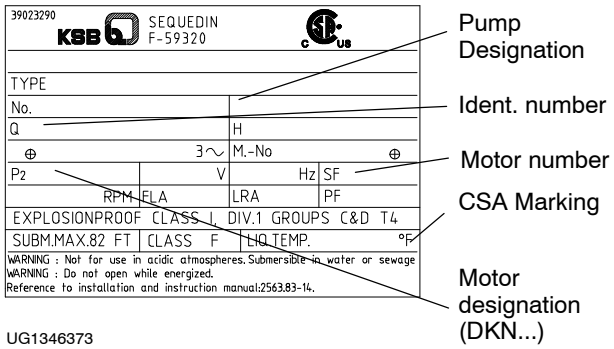

Identification:

Amarex N F 100 - 220 / 03 4 YL - G - 220

Type series
Impeller type (F, S)
- **F**= free-flow impeller
- **S** = cutter

Disch. nozzle diam. (mm)
Hydraulic size
Motor size
Number of poles
Motor version
- **YL** = explosion-proof (104 °F / 40 °C)
- **WL** = non-explosion-proof (140 °F / 60 °C)

Material combinations
- **G** = cast iron
- **G1** = cast iron with impeller of Noridur (duplex stainless steel)
- **G2** = cast iron with impeller of Norihard (wear resistant chromium white iron)
- **GH** = cast iron with impeller and intermediate casing of Norihard

Impeller diameter in mm

4.3 Construction

4.3.1 Drive

The electrical data is given on the name plate. Motor design to IEC 60034-1, thermal class F, enclosure IP 68, d.o.l. starting. Motors for explosion-proof pump units are supplied in type of protection:
In accordance with NEC 500. Listed by FM or CSA, Class I, Div. 1, Groups C & D, Code T4.

4.3.2 Shaft seal and bearings

Shaft sealing is effected by two mechanical seals. An oil reservoir between the two seals ensures cooling and lubrication. All pump sizes are equipped with maintenance-free rolling bearings.

5 Installation at site

5.1 Safety regulations

It is not permitted for any person to enter the sump/tank during operation of the pump unless special safety precautions have been taken in accordance with current safety regulations.

5.2 Checking procedure prior to installation

All structural work required must have been prepared in accordance with the dimensions stated in the dimension table (page 16–22).
The concrete foundations shall have sufficient strength to ensure safe and functional installation (min. 3,000 psi).

5.3 Installation of the pump

Prior to installation, inspect the pump set and the electric cables for transport damage. Make sure that there is no foreign matter inside the pump. Turn the impeller by hand to check that it moves freely. KSB's scope of supply includes a separate name plate, which shall be kept in the vicinity of the pumping system, outside the wet well. This name plate should be fixed in a visible position outside the sump (for example control panel, piping, mounting bracket).

5.3.1 Verification of operating data

Prior to installation the data on the name plate shall be checked against the purchase order data and system data.

5.3.2 Checking the oil level (YL and WL models only)

The oil chambers of our submersible motor pumps are filled with environmentally-friendly, non-toxic paraffin oil of medical quality at the factory.

Before commissioning the unit, check the oil level and correct, if necessary (see section 7.2.4).

5.3.3 Stationary installation with guide cable

5.3.3.1 Description

Guided securely along two guide cables, the pump slides into the sump or tank and attaches itself automatically to the discharge elbow which has been fitted to the floor. A joint ring between the pump and the discharge elbow and the weight of the pump itself achieve a pressure-proof elastic connection. (See dimension tables p. 16–22).

5.3.3.2 Installation of guide assembly

For installation please use the general assembly drawing "Wet installation" for orientation (page 14–15).
The handling chain / rope must be attached on the same side as the electric cable.

1. Fit claw 732 in accordance with the sketch below and the drawing supplied with the claw.

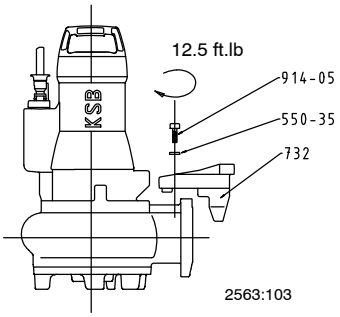

2. Use anchor bolts 90-3.37 (supplied by others) to fasten mounting bracket 894 on the edge of the sump opening. For information on holes to be drilled please refer to the annex "Dimension table", page 16–22. Tightening torques are given in **Table 1**.
3. Place threaded rod 59-22 and guide cable suspension bracket 572 onto the mounting bracket. Do not tighten nuts 920.36 too much, to allow sufficient play for subsequently tightening the cable 59-24-01. Fit the two clamping pieces 572.
4. Discharge elbow 72-1 shall be positioned and secured on the sump floor so that the guide cable will run roughly vertically after tightening. (A slight incline of up to 5 ° is permitted.) The discharge elbow is fastened to the sump floor with anchor bolts 90-3.38 (supplied by others). Tightening torques are given in **Table 1**.

   Insert one end of the guide cable 59-24.01 into clamping piece 571 fixing it with nut 920.37 onto guide cable suspension bracket 572. Run the cable around the discharge elbow 72.1 and back to the bracket 572. Insert the other end of the guide cable to the other clamping piece 571. Manually tension the cable and secure both ends by tightening nuts 920.37.

   Pull the cable taught by tightening nut 920.36 with the torque given in **Table 2**. Secure with a second nut.

   The loose cable ends at the clamping pieces 572 can either be twisted into a ring or the end can be cut off. After length adjustment tape the ends to avoid fraying.

   Place hook into the mounting bracket for attaching the lifting chain / rope at a later stage.

Table 1: Tightening torques for steel anchor bolts

Size	Tightening torque ft.lb
M 10 (3/8")	7.4 ft.lb
M 18 ((3/4")	59 ft.lb

Table 2: Guide cable tensioning (P)

Size		Tightening torque	P (lb)
50-170	**50-220**	5.16 ft.lb	674
65-170	**65-220**	6.63 ft.lb	899
80-220	**100-220**	10.38 ft.lb	1348

5.3.3.3 Installation of the pump

The pump should be positioned into the sump by guiding it from above over the clamping piece 572. The claw 732 is then positioned embracing the guide cable and the pump unit is slowly lowered into the sump. Once the pump unit is lowered, it will attached itself automatically to the discharge elbow 72-1 by its own weight being ready for use. Finally, the chain/rope should be attached to the hook on the mounting bracket or other suitable support.

5.3.4 Stationary installation with guide rails

5.3.4.1 Description

Guided securely along the guide rails, the pump slides into the sump or tank and attaches itself automatically to the discharge elbow which has been fitted to the floor. A joint ring between the pump and the discharge elbow and the weight of the pump itself achieve a pressure-proof elastic connection.
(See dimension tables, page 16–22.)

5.3.4.2 Installation of guide assembly

For installation please refer to the general assembly drawing ”Wet installation” for orientation, page 14–15.
The handling chain / rope must be attached on the same side as the electric cable.

1. Fit claw 732 (see 5.3.3.2 – 1).
2. Position discharge elbow 72-1 on the sump floor. Insert the guide rail into its location at the top of the discharge elbow.
3. Cut the guide rails to the appropriate length.
4. Insert the other end of the guide rails into mounting bracket 894 and mount the latter on the edge of the sump opening with anchor bolts 90-3.37 (supplied by others). For information on holes to be drilled please refer to the annex ”Dimension table”, page 16–22. Tightening torques are given in **Table 1**.
5. The discharge elbow must be positioned on the sump floor so that the guide rails run vertically.
6. Use anchor bolts 90-3.38 (supplied by others) to fasten the discharge elbow. Tightening torques are given in **Table 1**.

5.3.4.3 Installation of the pump

Guide the pump over mounting bracket 894 from above and slowly lower it down the rails. Attach chain 885 to hook 59-18.

5.3.5 Transportable model

5.3.5.1 Description

Transportable pump models are supplied with pump feet.
Other accessories can be enquired and ordered from our sales departments. (See dimension tables, page 16–22.)

5.3.6.2 Installation

For installation please refer to the general assembly drawing ”Wet installation” for orientation, p. 14–15.
The handling chain / rope must be attached on the same side as the discharge nozzle.
Undo screws 914.03 and push pump feet 182 into the openings in the suction cover.
Retighten the screws: tightening torque 12.5 lb. ft.
The pump shall always be placed in vertical position (motor on top) and on solid ground.

5.4 Connecting the piping

See dimension tables, page 16–22.

Connect the discharge pipe to the pump without transmitting any stresses or strains.

Never use the pump and the discharge elbow as an anchorage point for the pipeline.
Thermal expansions of the pipelines must be compensated by appropriate measures so as not to impose any extra loads on the pump exceeding the permissible pipeline forces and moments.

Danger to life when toxic or hot fluids are handled!

A swing check valve shall be fitted in long riser pipes, in order to prevent drainage of the discharge line after the pump is switched off. Choose the position of the swing check valve so that the sump can still be properly vented.

5.5 Connection to power supply

Connection to the power supply must be effected by a trained electrician only and in compliance with local regulations.
The available mains voltage must correspond to the voltage stated on the name plate.

Conductor marking

Connection in control panel	Standard S1BN8-F 8x16 AWG (1.5 mm²)	Variant S07RC4N8-F 8x16 AWG (1.5 mm²)
PE (ground conductor)	green/yellow	green/yellow
T1 (phase)	1	1
T2 (phase)	2	2
T3 (phase)	3	3
20	4	4
21	5	5
22	6	6
9	7	7

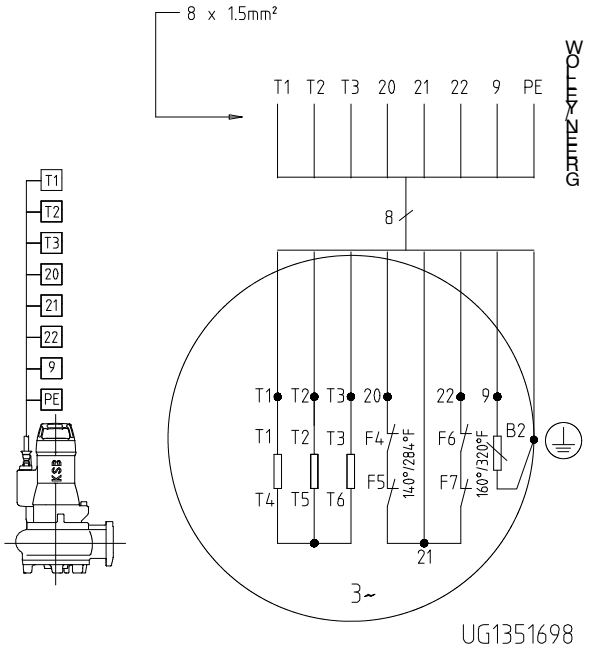

The individual conductors of the cable ends are marked.
If cables have to be shortened, make sure the markings are transferred correctly. Electrical installation must be in compliance with NEMA MG1.

In potentially explosive atmospheres, all electrical connections to the power supply cable must meet explosion protection requirements.

5.5.1 Monitoring equipment

Never operate an explosion-proof pump without monitoring the motor temperature.

5.5.1.1 Temperature monitoring

Max. operating voltage of switch 250 V,
max. switching current 2 A. Conductor marking 20, 21, 22.
The winding is protected by two independent temperature monitoring circuits.
The first monitoring circuit (bimetal switch as temperature control device, conductor marking 20, 21) trips the pump at cutout temperature and re-starts it automatically when the motor has cooled down.
A second monitoring circuit (bimetal switch as temperature limiter, conductor marking 21, 22) trips the pump before the winding temperature limit stipulated for the explosion-proof status of the unit is exceeded. Automatic reset and start-up is not permitted in this case, pumpsafe TM relays can be used to install this monitoring circuit.
After the unit has been tripped by the thermal cutout, it needs to be overhauled.
The pumps will only satisfy explosion protection requirements if the built-in temperature switch is in function.
Winding temperature sensor = bimetal switch (NC) in the motor winding.

5.5.1.2 Leakage detection

Caution Low-voltage supply: max. 48 V.

Leakage inside the motor
An electrode fitted inside the motor monitors the winding and connection space for leakage.
It must be connected to an electrode relay.
Tripping of the electrode relay must result in the pump being cut out. The electrode relay (K1) must meet the following requirements: Sensor circuit 10 to 30 V~, tripping current less than 0.5 mA.

Check of the Leakage sensor
Measure the resistance between terminal 9 and the ground conductor (PE).
The resistance measured must be higher than 60 kOhm.
Lower resistance values would suggest water ingress into the motor.

In this case the motor must be opened and overhauled.
B2 = Leakage sensor inside the motor Core identification: 9,
K1 = Electrode relay (Pumpsafe TM relay)

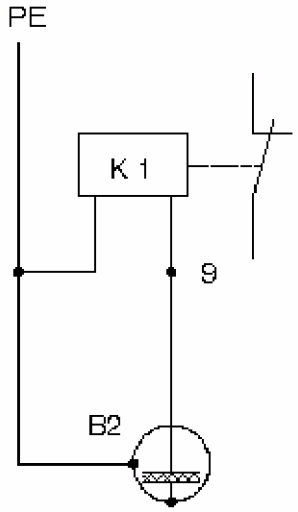

5.5.2 Frequency inverter operation

Use only frequency inverters where the motor current is limited to 1.5 times the nominal current.
Frequency inverter operation of the pump is possible in the frequency range from 25 to 60 Hz.
⚠ Never operate an explosion-proof pump outside this range!

5.5.3 Fitting the power cable

After the pump set has been installed, the power cable should be led upwards with as little slack as possible, to prevent damage caused by flow-induced motion.

5.5.4 Overload protection

The motor must be protected against overloading by a thermally retarded overcurrent relay to comply with NEC and regulations which are in accordance with local requirements.
This must be adjusted to the nominal motor current indicated on the nameplate.

5.5.5 Float switch

For automatic pump operation a float switch must be installed.
The switch-off level must be set to a level above dimension R1/R2 (see dimension tables, p. 16–22).

5.5.6 Checking the direction of rotation

⚠ **Never put your hands or any other objects into the pump.**

An arrow on the pump casing shows the correct direction of rotation. If the polarity of the power is known, connection in acc. with section 5.5. will automatically result in the correct direction of rotation of the pump.
Do not run the pump unit for more than 3 minutes when checking the direction of rotation.
Check the direction of rotation by switching on the unit and switching it off again immediately. (Observe impeller through the opening in the volute casing)
Dry-running will result in increased wear and must be avoided.
If the pump runs in the wrong direction of rotation, interchange two of the three phases in the control panel.
⚠ If the explosion hazard also exists during the installation phase, the direction of rotation must never be checked by starting up the unfilled pump unit, even for a short period, to prevent temperature increases resulting from contact between rotating and stationary components. The rotation check must be performed outside the potentially explosive atmosphere.

5.5.7 Connection of a potential equalizer

Pumps for wet-well installation are supplied without connection of a potential equalizer (risk of corrosion).
⚠ Special requirements for chemically corrosive media: Do not use the ground conductor if the pump is used for chemically corrosive media.

Instead, the ground conductor shall be connected to a flange of the discharge pipe which is not in contact with the fluid handled. Make sure that electrical contact is established between the newly created potential equalizer connection and the pump.

6 Commissioning, start-up / Shutdown

Do not use the pump for fluids to which its materials are not resistant.
Before starting up the pump make sure that the following points have been checked and carried out in acc. with sections 5.3, 5.4 and 5.5.

Make sure to check:
- the operating data
- the oil level (YL and WL models)
- the direction of rotation
- the electrical connections
- the correct installation of the pump

6.1 Commissioning / Start-up

Before starting up the pump, make sure that the liquid level can never drop below dimension R3 (see dimension tables, p. 16–22).
The pump shall only be operated in such a way that air ingress into the pump casing is not possible.
For continuous operation (S1) the pump must be fully submerged.

Never allow an explosion-proof pump to run dry!

6.1.1 Handling suspended solids

Pumps with S-impeller are preferably used for handling water containing sludge with solids in suspension. In such cases we recommend to use an inclined claw. In addition, operation of the pump with S-impeller should continue under these conditions for 10 seconds after the pump has reached the suction limit.

Caution

Intermittent operation up to the bottom edge of the pump casing is permissible (see dimension RS in the outline drawings, pages 17–18.
If dimension RS is observed, the pump is always in contact with the fluid handled.
Excessive switching frequencies of the pump shall be avoided.
Never allow an explosion-proof pump to run dry!

6.1.2 Fluid temperature

Explosion-proof pumps (model YL) must never be operated at temperatures exceeding 40 °C (104 °F), not even for a short time. They must never work in fluids of a temperature exceeding the temperature limit stated on the nameplate.

Responsibility for compliance with the specified fluid temperature (operating temperature) lies with the plant operator. The max. permissible fluid temperature depends on the temperature class to be complied with.
Non-explosion-proof model WL: 140 °F (60 °C)
or as indicated on the name plate.
Non-explosion-proof models can be operated up to 176 °F (80 °C) for short periods (3 – 5 minutes) or until the thermal protection devices trip the pump.

The pump must not be operated at temperatures exceeding the ones stated above.

6.1.3 Frequency

The starting frequency shall not exceed 30 starts per hour.

6.1.4 Operating voltage

Maximum admissible deviation of rated voltage:
+/–10 % for non-explosion-proof models
+/–10 % for explosion-proof models
The maximum permissible voltage difference between the individual phases is +/–1 %.

6.1.5 Densitiy of the fluid pumped

Max. density 1.1. For higher densities please contact KSB.

6.2 Shutdown / Storage / Preservation

6.2.1 Storage of new pumps

- Store the pump in a dry location in upright position and in its original packaging. Support the electric cable at the cable entry to prevent permanent deformation.
- Spray-coat the inside wall of the pump casing, and in particular the impeller clearance areas, with oil and close the pump nozzles (e.g. with plastic caps or similar).

6.2.2 Measures to be taken for prolonged shutdown

6.2.2.1 The pump remains installed; periodic check of operation

In order to make sure that the pump is always ready for instant start-up, start the pump set regularly once every 3 months for a short time (approx. 1 minute). Before doing so, make sure that the liquid level in the sump or tank is above dimension R1/R2.

6.2.2.2 The pump is removed from the well and stored

Before putting the pump into storage, carry out all checks and maintenance work specified in sections 7.1 and 7.2. Then apply the preservative as described in section 6.2.1.

7 Service and maintenance

7.1 General instructions

A regular maintenance schedule will help avoid expensive repairs and contribute to trouble-free, reliable operation of the pump with a minimum of maintenance expenditure and work.

Work on the unit must only be carried out with the electrical connections disconnected (incl. control cable).

Pumps handling liquids posing health hazards must be decontaminated. When draining the fluid see to it that there is no risk to persons or the environment. All relevant laws must be heeded.

Special regulations apply to repair work on explosion-proof pumps. Modifications or alteration of the pump may affect explosion protection and are only permitted after consultation with the manufacturer. Only original spare parts and accessories authorized by the manufacturer must be used for explosion-proof pumps.

7.2 Service / inspection

Servicing and maintenance work shall include the measures listed in the table below. The work shall be performed by qualified personnel only!

§	Maintenance work	Maintenance interval
7.2.1	Insulation resistance check	Every 4000 h, but at least once a year
7.2.2	Check of power supply cable	
7.2.3	Check of monitoring devices	
7.2.4 **7.4.3**	Oil change	
7.2.5	Visual inspection of handling chain / guide cable	
	General overhaul	every 5 years

In difficult operating conditions, maintenance intervals must be reduced.

7.2.1 Insulation Resistance Check

Measurements must be taken at the cable ends (disconnected in the control panel). Measuring voltage: 500 V D.C.
The insulation resistance measured between phase and ground must not be less than **1 MOhm**. If the resistance measured is lower, cable and motor resistance must be measured separately to locate the damage.
Measure cable resistance:
- between phase and ground
- between temperature sensors and ground

If the insulation resistance for the power cable is less than **1 MOhm**, the power cable is defective and must be replaced.
Measure motor resistance:
- between phase and ground
- between temperature sensors and ground

If the insulation resistance of the motor is lower than **1 MOhm**, the winding is damaged. We recommend to contact KSB's service department.

7.2.2 Checking the power cable

- Visual inspection

If the cable shows mechanically or chemically induced damage such as scratches or blisters, the complete cable must be replaced.
- Checking the ground conductor

The resistance between the ground conductor and ground must be less than 1 Ohm.

7.2.3 Checking the monitoring devices

7.2.3.1 Temperature switch

- In a 33 ft cable, the resistance between conductor ends 20 and 21 as well as 21 and 22 must be less than 1Ω.

7.2.3.2 Moisture sensor (optional)

Low-voltage supply: max. 48 V.
The motor space can be monitored with a moisture sensor (part No. 81-56).

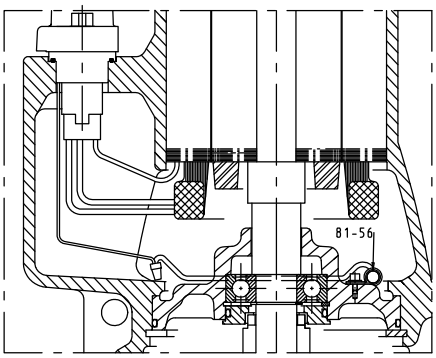

The insulation resistance between conductor 9 and ground must be higher than 1 MΩ. Lower resistance values would suggest moisture or water ingress into the motor. In this case the motor must be opened and overhauled. The moisture sensor must be replaced.

7.2.4 Oil change (YL and WL models)

7.2.4.1 Draining the oil

When the pump has reached operating temperature or if fluid has penetrated into the oil chamber, there may be excess pressure in the oil chamber. Oil may spurt out of the oil chamber when screwed plug 903 is opened.
- Position the pump as shown in figs. 1 or 2, as applicable (YL and WL models).
- Place a suitable container under the screwed plug.
- Undo the screwed plug with joint ring 411 and drain off the oil.

Paraffin oil is bright and transparent in appearance. A slight discoloration, caused by the running-in process of new mechanical seals or small amounts of leakage from the fluid pumped, has no detrimental effect. However, if the oil fill is severely contaminated by the fluid pumped, this would suggest a damage on the mechanical seal. In this case, the mechanical seal must be replaced.

- Regional regulations in force at the place of installation must be adhered to.
- The oil fill must not contaminate the fluid handled.
- Please observe the local laws applicable to the disposal of such substances!

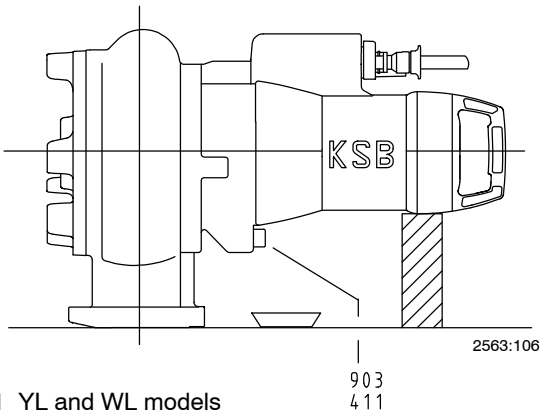

Fig. 1 YL and WL models

Pump sizes 50-170 and 65-220:
Turn the pump until the drain hole points downward (fig. 2).

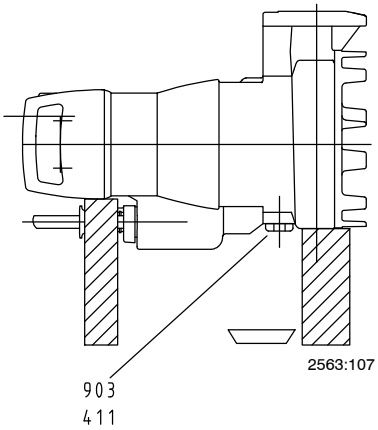

Fig. 2 YL and WL models

7.2.4.2 Filling in oil

Position the pump as shown in figs. 3 and 4.
Fill in oil (quantity: 3/4 quarts).
Dimension M = oil level.
Close screwed plug 903 with joint ring 411 again.

Recommended oil quality:
Paraffin oil, thin-bodied, HAFA CLAREX OM, Marcol No. 87 by EXXON, Merck No. 7174, Duoprime 90 made by LIONDELL or equivalent non-toxic oil (type Codex).

As an alternative, all doped and undoped motor oil grades SAE10W to SAE20W or any brand vegetable oil can also be used. Please observe the local laws applicable to the disposal of such substances.

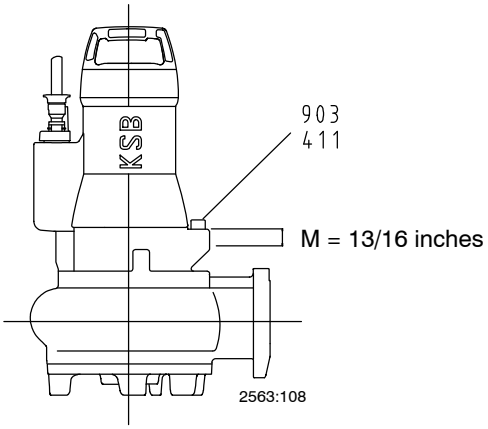

Fig. 3 YL and WL models

Pump sizes 50-170 and 65-220 YL and WL:
Position the pump as shown in fig. 4.

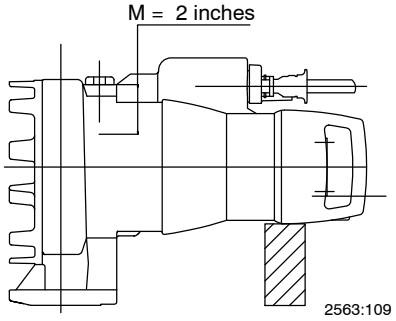

Fig. 4 YL and WL models

7.2.5 Visual inspection of lifting chain (rope) / guide cable

During maintenance work the lifting chain / rope and the guide cable and their shackle shall be inspected for damage. Damaged components shall be replaced by original spare parts.

7.3 Environmental protection / Drainage / Disposal

⚠ If the pump has been used to handle hazardous media, special care must be taken when draining the oil so that personnel and environment are not endangered. All Government regulations must be observed.

7.4 Dismantling the pump

Dismantling must always be carried out in accordance with the sectional drawings and exploded views, pages 24–25.

7.4.1 General instructions

Repair and maintenance work must only be performed by specially trained personnel.

⚠ Observe the safety regulations laid down in section 7.1. Special conditions apply to repair work on explosionproof pumps. Please refer to section 7.4.2

In case of damage you can always contact our service departments.

7.4.2 Dismantling of YL and WL models

The oil chamber must be drained prior to dismantling (see section 7.2.4).

7.4.2.1 Dismantling the hydraulic system

1. Remove suction cover 162.
2. Undo and remove impeller fastening screw M8. The impeller / shaft connection is achieved by a tapered fit.
3. For dismantling of the impeller, an M10 jacking thread is provided at the impeller hub. Screw in tool as shown in the drawing below and remove the impeller.

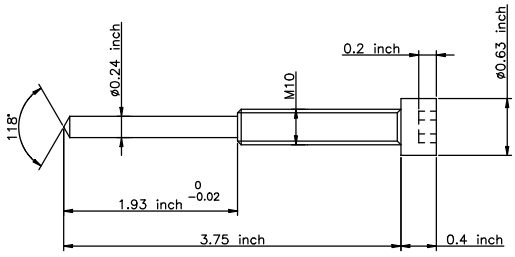

Impeller removal kit: 39 022 760

7.4.2.2 Dismantling of mechanical seal and motor

When dismantling the motor section and the power cable make sure that the conductors are clearly marked for future reassembly.

⚠ The motors of explosion-proof pumps are supplied in "flameproof enclosure" type of protection. Any work on the motor section which may affect explosion protection, such as re-winding and machining repairs, must be inspected and approved by an authorized expert or performed by the manufacturer. No modifications may be made to the internal configuration of the motor.

1. Push spring-loaded ring 433.02 along the shaft.
2. Undo screws 914.02 and remove.

3. Remove intermediate casing 113.
4. Push seat ring 433.02 out of intermediate casing 113.
5. Remove circlip 932.03.
6. Remove spring-loaded ring 433.01.
7. Pull off seat ring holder 476.
8. Take the seat ring out of seat ring holder 476.
9. Take O-ring 412.02 out of seat ring holder 476.
10. Take circlip 932.04 out of bearing bracket housing 355.
11. Remove bearing bracket housing 355.
12. Pull out rotor 818.
13. Remove circlip 932.01.
14. Remove circlip 932.02.
15. Pull off the two rolling element bearings 321.

7.4.3 Dismantling of hydraulic system

See section 7.4.2.1.

7.4.3.1 Dismantling of mechanical seal and motor

When dismantling the motor section and the power cable make sure that the conductors are clearly marked for future reassembly.

1. Push spring-loaded ring 433.02 along the shaft.
2. Drain off the oil *(see drawing below).*
3. Undo and remove screws 914.02 on bearing bracket 330.
4. Detach rotor assembly 818 from bearing bracket 330.
5. Push seat ring 433.02 out of bearing bracket 330.

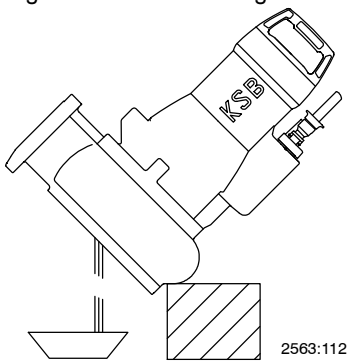

6. Remove circlip 932.02.
7. Take bearing bracket 330 off rotor 818.
8. Remove circlip 932.03.
9. Remove spring-loaded ring 433.01.
10. Pull off seat ring holder 476.
11. Take seat ring 433.01 out of seat ring holder 476.
12. Remove circlip 932.01.
13. Extract rolling element bearing 321.02.
14. Extract rolling element bearing 321.01.

7.5 Reassembly of pump

7.5.1 General instructions

Clean all dismantled components and check them for signs of wear. Damaged or worn components are to be replaced by **original spare parts**. Make sure that the seal faces are clean and that the sealing elements are properly fitted. It is recommended to use new sealing elements (O-rings/gaskets) whenever the pump is reassembled.

Reassembly is effected in reverse order to dismantling in compliance with the general assembly drawing and list of components.
YL and WL models: Fill in oil as described in section 7.2.4.2.
All screws and bolts must be properly tightened during reassembly.
Tightening torque: 12.5 ft.lb
except for impeller screw: 22 ft.lb
Tightening torque for screwed plug 903: 17 ft.lb

7.5.2 Motor

Before reassembly, check that all joints relevant to explosion protection (flame paths) are undamaged. Components with damaged flame paths must be replaced. Only original spare parts made by KSB must be used for explosion-proof pumps.
All motors must be subjected to the electric tests indicated in sections 6.1, 6.2 and 7.2.

7.5.3 Fitting the mechanical seal

Please observe the following when fitting the mechanical seal:
- Extreme care and cleanliness are of utmost importance.
- The surface of the shaft must be absolutely clean and undamaged.
- Before reassembly, the contact faces shall be wetted with a drop of oil. When sliding on the mechanical seal, wet the inside diameter with soapy water (no oil) and protect the mechanical seal from damage.

Fitting the motor-end mechanical seal:
To prevent damage to the rubber bellows by the shaft recess, place a thin foil (approx. 0.004 ... 0.0118 inch) around the free shaft stub. Slip the rotating assembly over the foil into its installation position. Then remove the foil.
Adusting special mechanical seal type HJ (see page 23): Adjust mechanical seal to dimension 1 1/8 inches and tighten the two locking screws.

7.5.4 Fitting the S-type impeller

After installation of the pump-end mechanical seal 433.02:
1. Slip the impeller onto the shaft end
2. Place grooved pin 561 into the impeller
3. Place impeller body 23-7 onto the centering hub
4. Screw in impeller screw 914.04 by hand
5. Tighten the screw (tightening torque 22 ft.lb)
6. Mount ring 500 with screws 914.06 in suction cover 162
7. Measure dimension x on the suction cover
8. Measure dimension y between the impeller vanes and the pump casing, see **Caution** note.
9. Use the screws 904 to set dimension h = x + s – y, where s (0,0118 inch ± 0,004 inch) is the clearance between the suction cover and the impeller vanes.
10. Tighten the suction cover with screws 914.03.

Caution **Clearance "s" is only valid if the rotor assembly is pulled towards the suction side until it rests against the suction cover (see drawing below). This operation shall be performed very carefully. Hold the rotor in this position until dimension "y" has been measured.**

Amarex N S 50

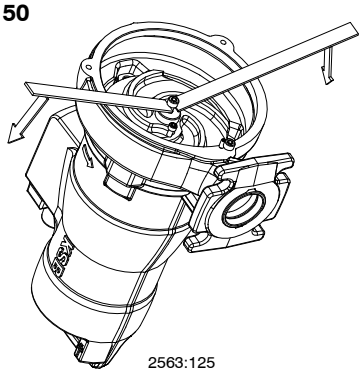

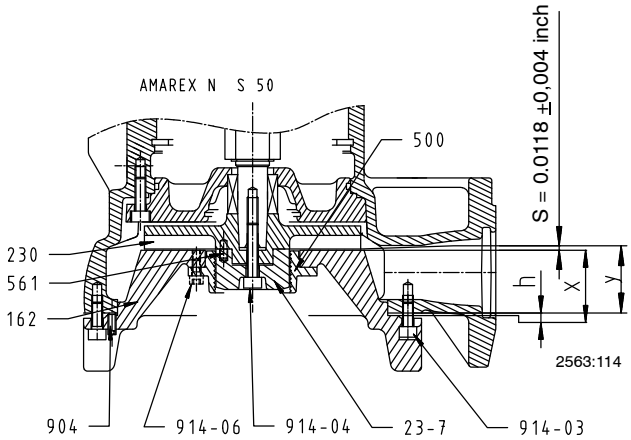

7.5.6 Checking seals (YL and WL models)

Procedure:
- Use the oil filler opening for checking seals.
- Screw the testing device tightly into the oil filler opening.
- Test medium: compressed air, max. 7.25 psi.
- Test period: 2 min.
- The pressure must not drop during the test period.

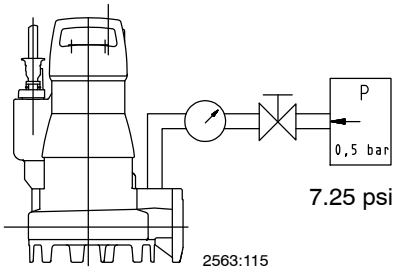

7.5.7 Filling the oil reservoir (YL and WL models only)
See section 7.2.4.

7.6 Spare parts stock
Only original spare parts made by KSB must be used for explosion-proof pumps.

When ordering spare parts please always quote the following data stated on the name plate.
Pump type:
e.g. Amarex N F 100-220/044YLG-195
Order No. / ident. No. and serial No.:

7.6.1 Recommended spare parts stock for 2 years' operation as per VDMA

Part No.	Description	Number of pumps (incl. stand-by pumps)						
		2	3	4	5	6	8	10 and more
230	Impeller	1	1	2	2	3	4	50 %
321	Rolling element bearing, motor end	1	1	2	2	3	4	50 %
321	Rolling element bearing, pump end	1	1	2	2	3	4	50 %
433	Mechanical seal motor end	2	3	4	5	6	7	90 %
433	Mechanical seal pump end	2	3	4	5	6	7	90 %
99-9	Set of sealing elements	4	6	8	8	9	10	100 %

7.6.2 Spare parts set (39 080 091)
The following parts are available as a set for the complete type series:
- 1 rolling element bearing 321.01
- 1 rolling element bearing 321.02
- 1 mechanical seal 433.01
- 1 mechanical seal 433.02
- 1 set of sealing elements 99-9
- 1 set of fasteners 99-20
- 1 set of circlips

8 Trouble - shooting

					Unit not pumping	
					Pump delivers insufficiently	
					Current / power consumption too high	
					Head too low	
					Pump operation is uneven and noisy	
					Cause	**Remedy:** Prior to carrying out work to the pressure containing parts – release pressure from the pump! Disconnect power supply to the pump.
	X				Pump delivers against excessively high discharge pressure	Open discharge valve further until duty point is reached
	X				Valve in discharge pipe not fully open	Open gate valve completely
		X		X	Pump not running within operating limits	Check operating data of the pump
X					Pump and / or pipeline are not completely vented or primed	Vent – by lifting the pump off the discharge elbow and lowering it back again.
X					Pump inlet blocked by deposits	Clean inlet, pump parts and non return valve
	X		X	X	Inlet pipe or impeller blocked – rotor running sluggishly	Remove deposits from within the pump and / or pipelines
		X		X	Dirt / fibres in impeller chambers	Check impeller ensuring that it rotates slightly – if necessary clean hydraulic
	X	X	X	X	Wear of internal pump parts	Replace worn parts
X	X		X		Damaged column pipe (pipe and seal)	Replace defective column pipe Renew seals
	X		X	X	Unacceptable air or gas content within the pumped media	Contact your nearest authorized KSB agent
				X	Oscillations caused by plant	Contact your nearest authorized KSB agent
	X	X	X	X	Wrong direction of rotation	Switch two phases of the circuit cabling
		X			Insufficient operating voltage	Check electric supply Check cable connections
X					Motor not running due to no voltage supply	Check electrical installation Inform electrical company
X	X		X		Motor running on two phases only	Replace defective fuses Check electric cable connections
X		X			Motor winding or electric cable defective	Replace by new original KSB cabling or contact your nearest authorized KSB agent
		X		X	Radial bearing in the motor defective	Contact your nearest authorized KSB agent
	X				Water level dropping excessively during operation	Check supply and capacity of system – (sump depth) check level control
X					Temperature monitor for winding control has ceased to operate due to excessively high winding temperature	The motor will switch on automatically after cooling down
X					Thermistor release unit without automatic restart facility for temperature limit (flameproof) has been released due to exceeding the permissible winding temperature	Check the pump.
X					Moisture protection relay has been released due to moisture within the motor	Check the pump.

Caution If working inside the pump is necessary whilst the pump is under warranty, then contact your nearest authorized KSB agent prior to commencement of work.

Non - observance will negate any warranty claims.

9 Annex

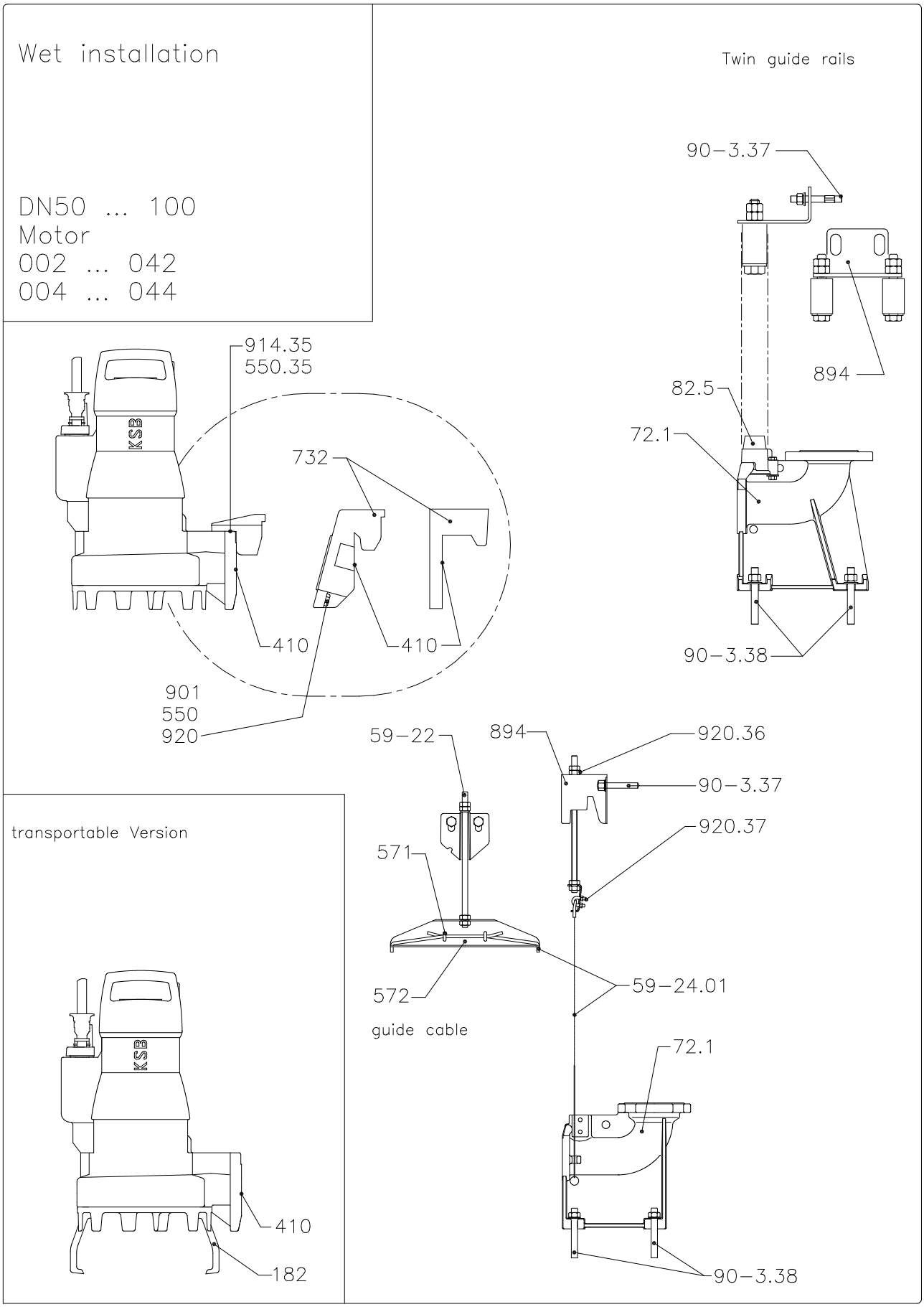
Wet installation
DN50 ... 100
Motor
002 ... 042
004 ... 044
Twin guide rails
90–3.37
894
82.5
72.1
90–3.38
914.35
550.35
732
410
410
901
550
920
59–22
894
920.36
90–3.37
920.37
571
572
guide cable
59–24.01
72.1
90–3.38
transportable Version
410
182

Part no.	Part description
59-22	Threaded rod
59-24.01/02	Cable
72-1	Discharge elbow
82-5	Adapter
90-3	Anchor bolt
182	Foot
410	Profile joint
550	Disc
571	Clamping piece
572	Guide cable suspension bracket
732	Claw
894	Bracket
901	Hex. head bolt
914	Hex. socket head cap screw
920	Nut

Dimensions Table Amarex N, Transportable Model

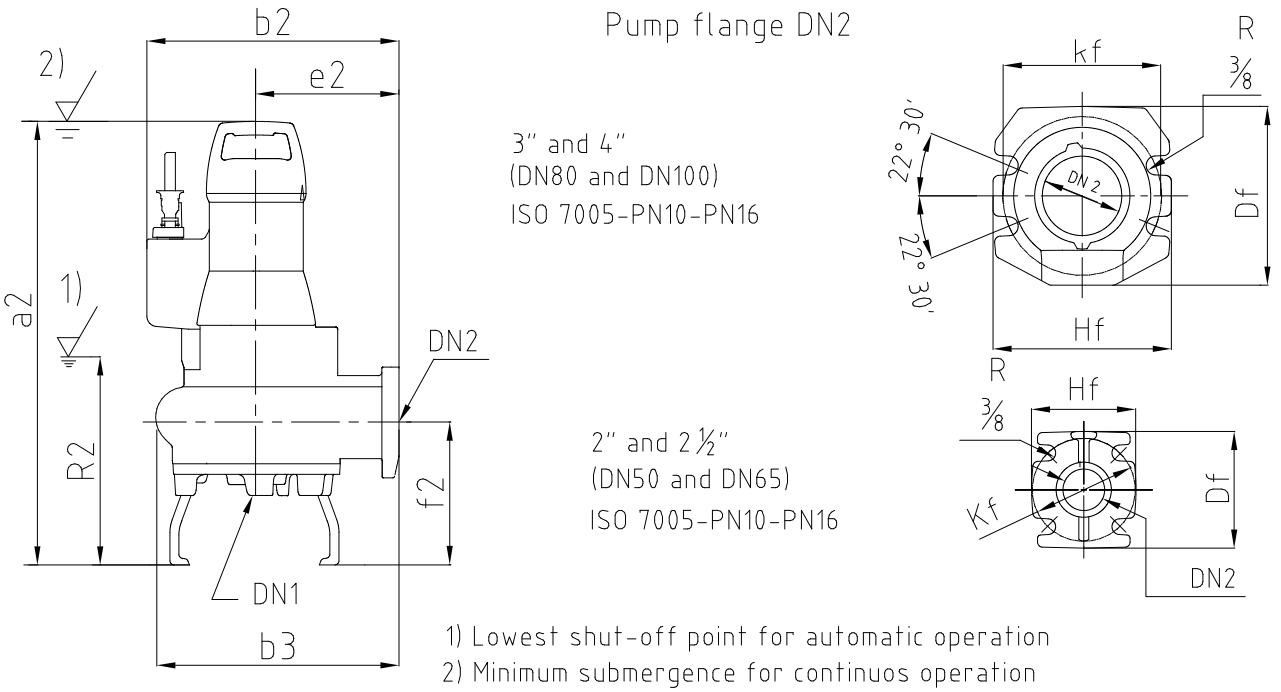

Amarex® N	Pump (F) DN1	DN2	a2)	b2	b3	e2	f2)	R2
50-170 S/F	2"	2"	21 17/32	12 43/64	11 17/32	7 3/32	5 63/64	8 5/32
50-220 S/F	2"	2"	23 31/32	13 15/64	12 3/32	7 3/32	6 7/64	8
65-170 F	2 ½"	2 ½"	25 45/64	14 29/64	13 5/16	8 17/64	6 29/64	9 49/64
65-220 F	2 ½"	2 ½"	23 11/32	13 57/64	13 21/32	8 17/64	6 27/64	9 61/64
80-220 F	3"	3"	26 29/64	15 13/64	15 7/16	9 1/16	7 23/64	9 51/64
100-220 F	4"	4"	27 31/64	15 5/64	15 23/64	9 1/16	8 5/32	10 29/32

Amarex® N	Flange Hf	Kf	Df
50-170 S/F	4 59/64	4 59/64	5 33/64
50-220 S/F	4 59/64	4 59/64	5 33/64
65-170 F	5 43/64	5 45/64	6 29/64
65-220 F	5 43/64	5 45/64	6 29/64
80-220 F	7 3/32	6 19/64	7 3/32
100-220 F	7 61/64	7 3/32	8 5/64

532 188 ind 04

Dimensions Table Amarex N 50-... Stationary Installation – Guide cable – Inclined Claw

DN 3 = DN 50 : ASME

Amarex N – WL	YL	Pump DN 1	Pump DN 2	a 1	a 2	b 1	b 2	b 3	d	e 2	f 1	f 2	g	h 1	k 1	l 1	m	N	Foundation O	P	R 1	R 2	R 3	RS	S	G calbs
S 50-170		–	2"	18 1/2	21 17/32	14 5/64	12 43/64	11 17/32	9 27/32	7 5/64	4 1/8	5 63/64	7 7/8	1 17/32	18 37/64	19 49/64	4 59/64	18 7/32	18 19/64	13 25/32	6 21/64	8 9/64	19 23/32		3 7/64	86
F 50-170		2"																								95
Inclined Claw		–	2"	19 31/64	–	16 37/64	–	–	9 27/32	–	4 1/8	–	7 7/8	2 9/32	19 11/16	20 45/64	4 59/64	18 57/64	18 57/64	13 25/32	8 21/32	–	21 21/32	6 21/64	–	
S 50-220		–	2"	20 15/16	23 31/32	15 5/16	13 7/32	12 5/64	10	7 5/64	4 1/8	6 7/64	7 7/8	1 1/16	19 7/32	20 15/64	5 5/64	18 19/64	18 19/64	13 25/32	6 1/32	8	22		3 7/64	119
F 50-220		2"																								119
Inclined claw		–	2"	21 57/64	–	16 3/8	–	–	10	–	4 1/8	–	7 7/8	2 1/8	19 59/64	20 15/16	5 5/64	18 57/64	18 57/64	13 25/32	9 3/64	–	23 55/64	6 21/64	–	

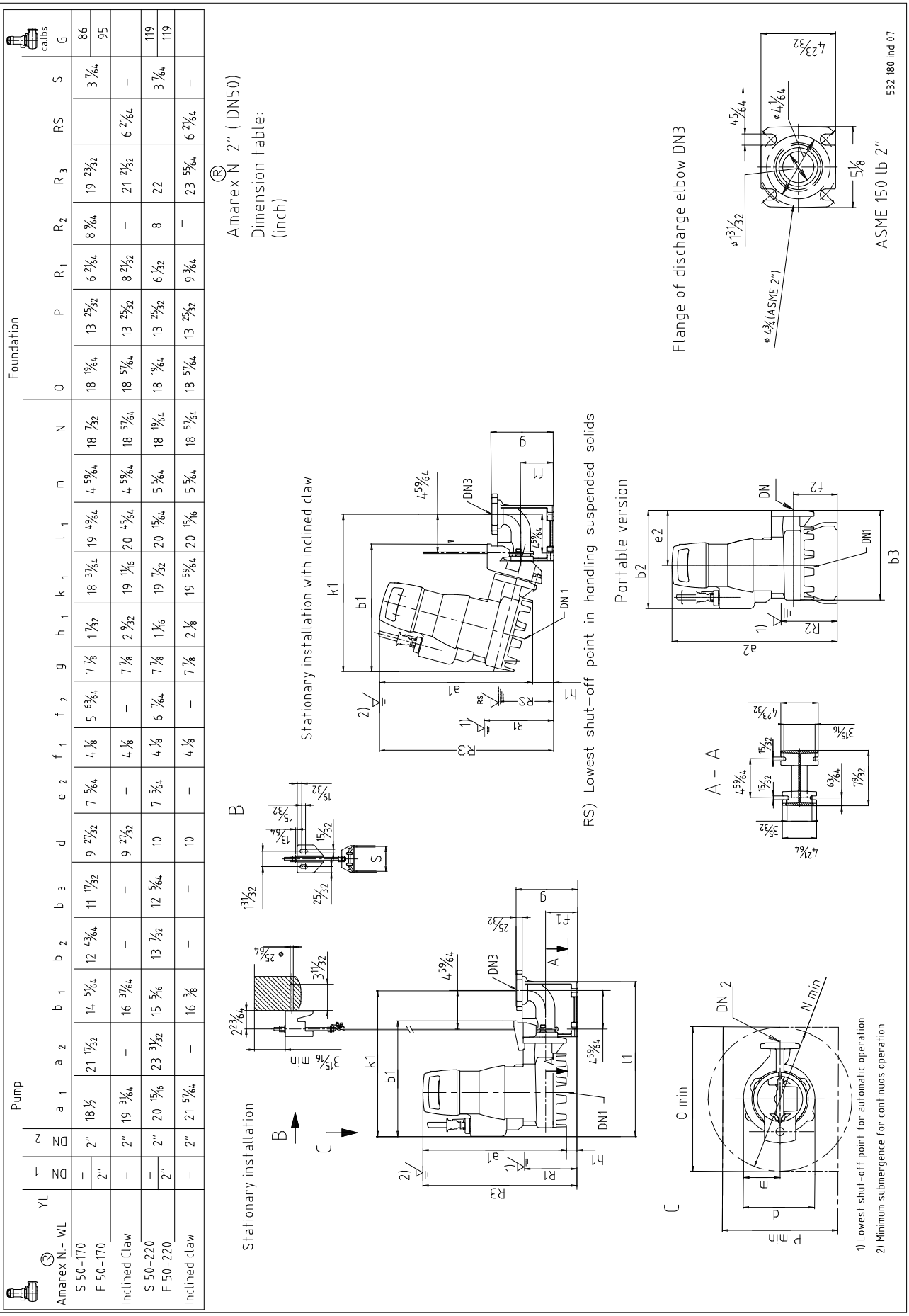

Dimensions Table Amarex N 50, Stationary Installation – Guide Rail Arrangement - Inclined claw

DN 3 = DN 50 : ASME

Amarex® N YL WL	Pump DN1	Pump DN2	a1	b1	d	f1	g	h1	k1	l1	m	Foundation N	O	P	R1	R3	RS	S	G lbs
Inclined Claw S 50–170	—	2”	19 29/64	16 39/64	9 27/32	4 9/64	7 7/8	2 1/8	19 41/64	20 25/32	4 59/64	18 57/64	18 57/64	13 25/32	8 21/32	21 21/32	6 11/32	1 31/32	86
F 50–170	2”																—		95
Inclined Claw S 50–220	—	2”	21 39/64	16 49/64	10	4 9/64	7 7/8	2 3/32	19 59/64	21 1/16	5 5/64	18 57/64	18 57/64	13 25/32	9 1/16	23 55/64	6 11/32	1 31/32	119
F 50–220	2”																—		119

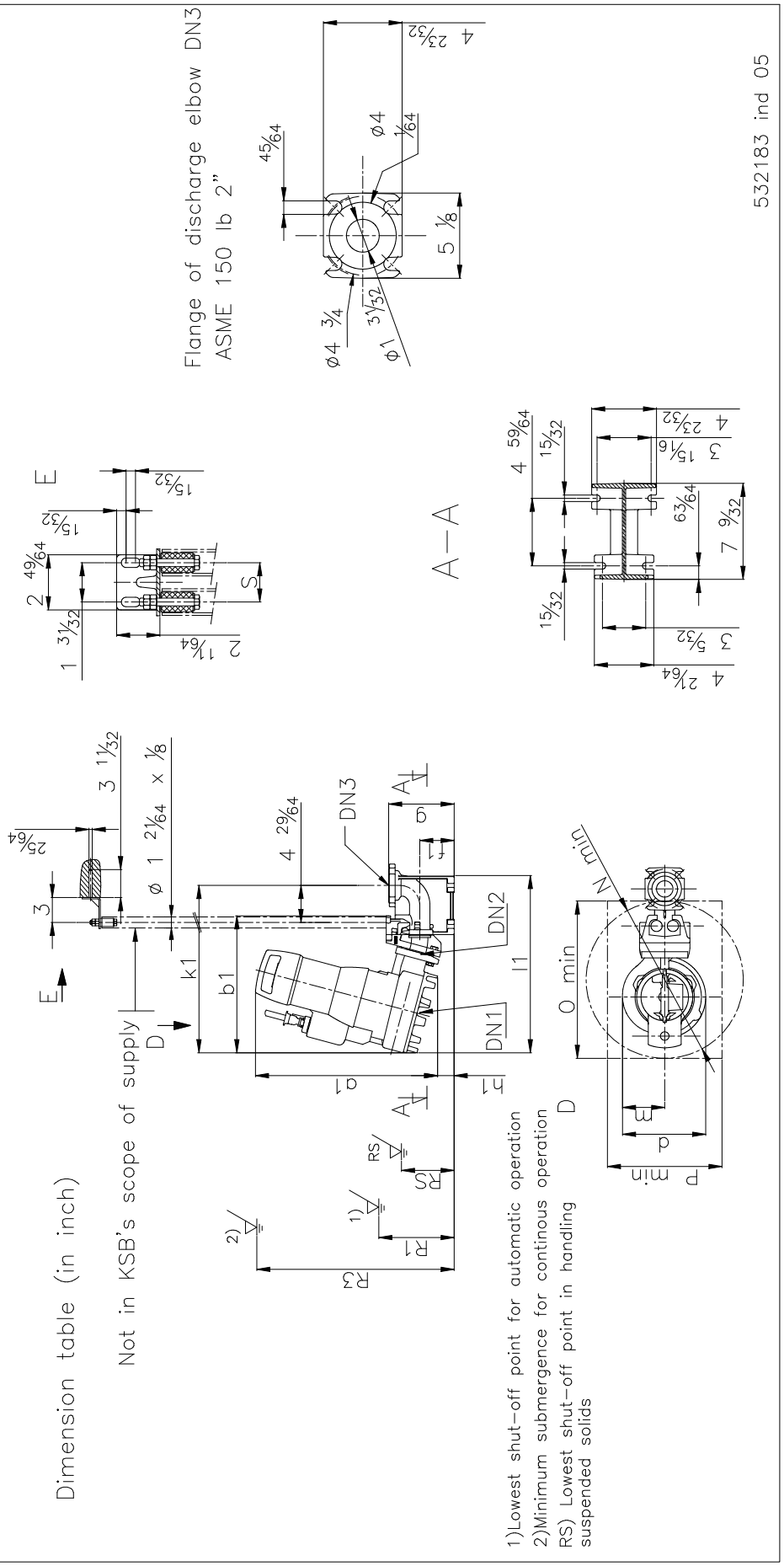

Dimensions Table Amarex N 65, Stationary Installation - Guide cable

DN 3 = 65/65

Amarex N.- WL	YL	DN1	DN2	Pump a 1	a 2	b 1	b 2	b 3	d	e 2	f 1	f 2	g	h 1	k 1	l 1	m	N	O	P	R 1	R 2	R 3	ca.lbs G
F 65-170		2½	2½	22 9/64	25 45/64	16 39/64	14 13/32	13 5/16	9 7/8	8 17/64	5 29/32	6 29/64	10 15/64	2 13/32	21 31/32	22 61/64	5	19 11/16	19 11/16	15 3/4	9 7/32	9 49/64	25 5/32	119
F 65-220		2½	2½	20 25/64	23 11/32	16 1/32	13 55/64	13 21/32	10 7/16	8 17/64	5 29/32	6 27/64	10 15/64	2 31/64	21 27/64	22 13/32	5 19/32	19 11/16	19 11/16	15 3/4	9 31/64	9 61/64	22 7/8	100

Dimension table (in inch)
65 - 170, 65 - 220

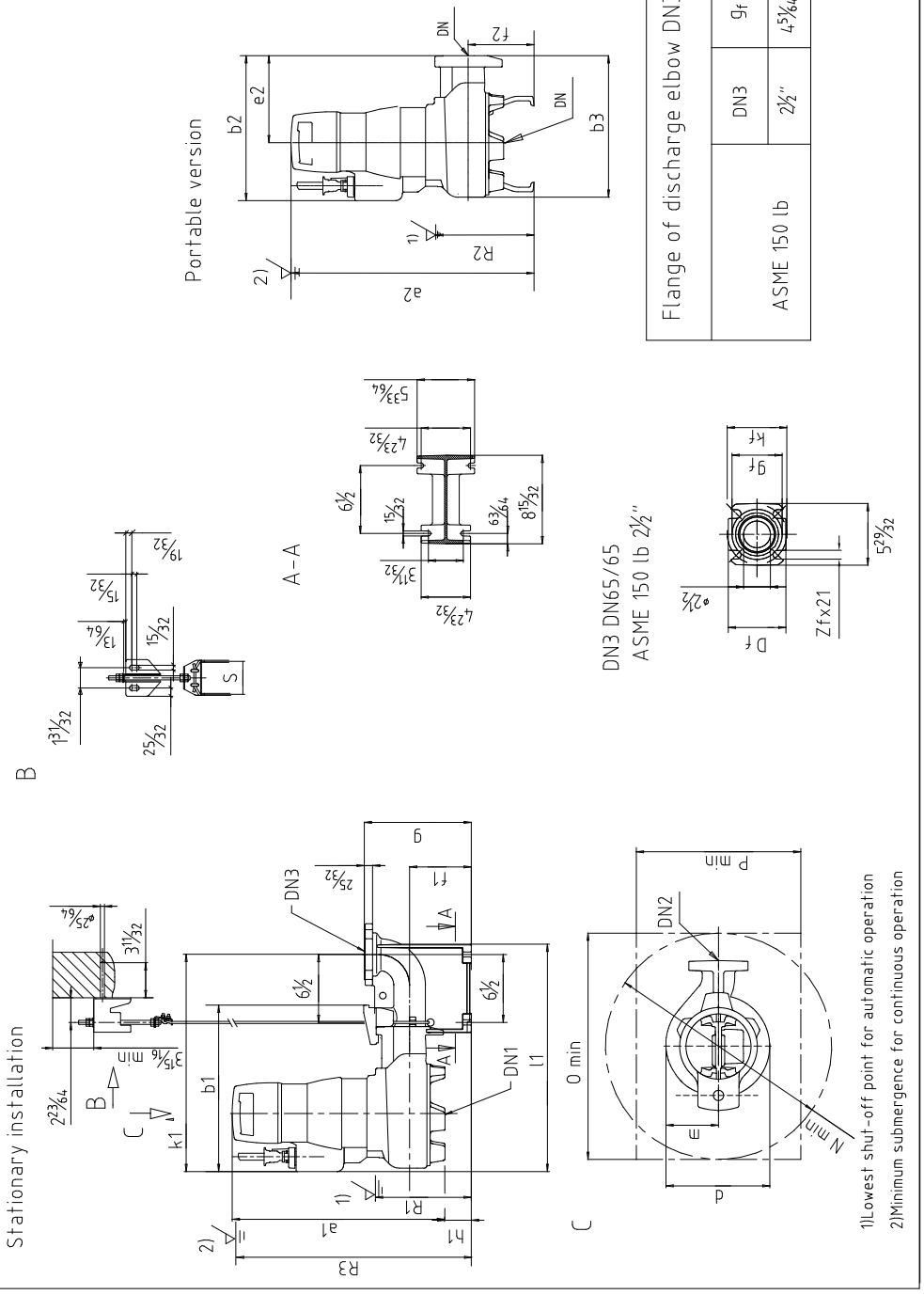

Dimension Table Amarex N 65, Stationary Installation – Guide Rail Arrangement

DN 3 = DN 65/65 : ASME

Amarex® N YL WL	Pump DN1	Pump DN2	a1	b1	d	f1	g	h1	k1	l1	m	Foundation N	O	P	R1	R3	S	G lbs
F 65–170	— / 2 ½"	2 ½"	22 49/64	18 27/64	9 7/8	5 29/32	10 15/64	2 13/32	23 5/32	24 9/64	5	21 21/32	21 21/32	15 3/4	9 7/32	25 5/32	1 31/32	119
F 65–220	— / 2 ½"	2 ½"	20 25/64	17 7/8	10 7/16	5 29/32	10 15/64	2 31/64	22 19/32	23 37/64	5 19/32	21 21/32	21 21/32	15 3/4	9 31/64	22 7/8	1 31/32	99

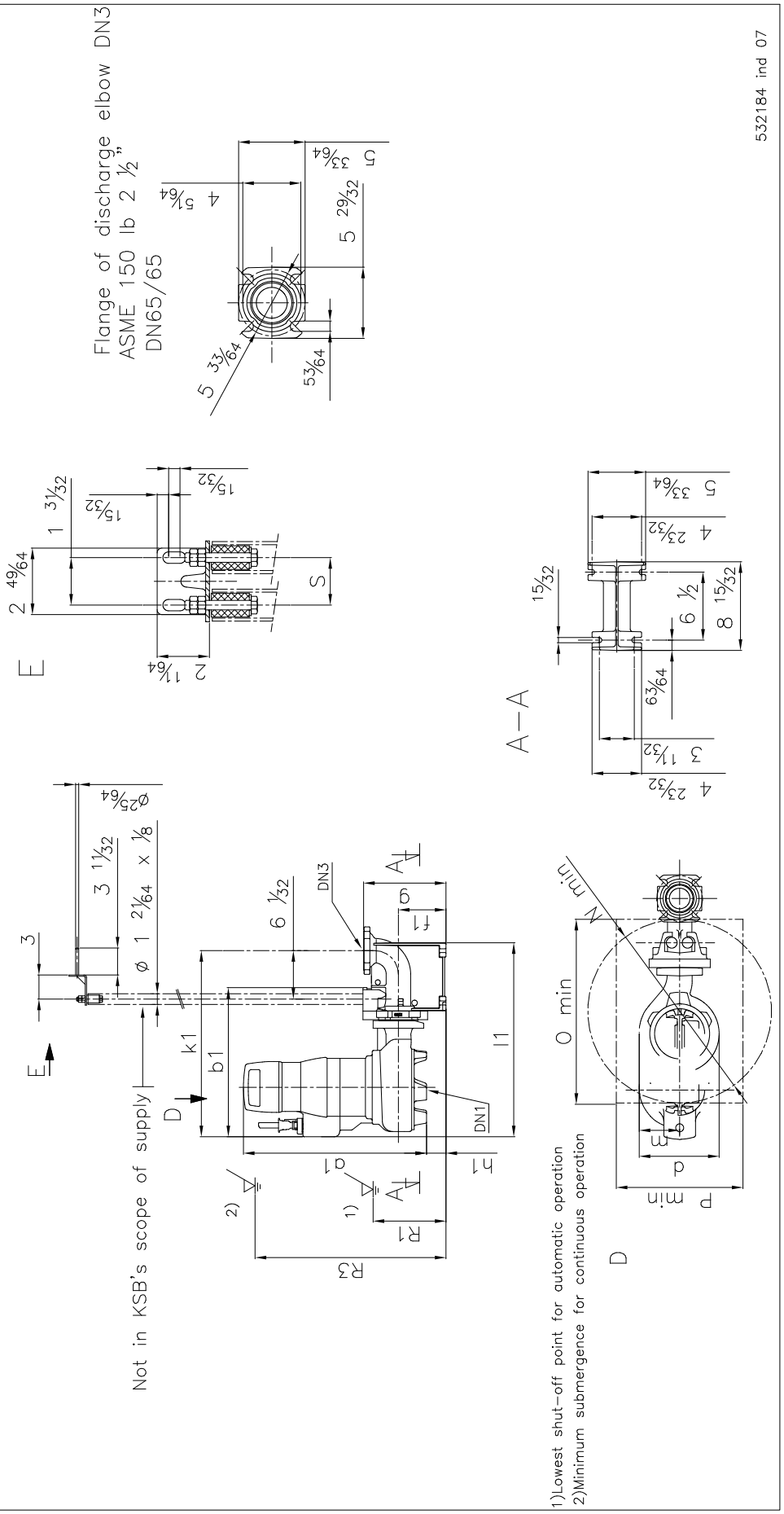

Dimensions Table Amarex N 80 and 100, Stationary Installation - Guide cable

DN 3 = 80/80 or 80/100 or 100/100: ASME = Standard

Stationary Installation

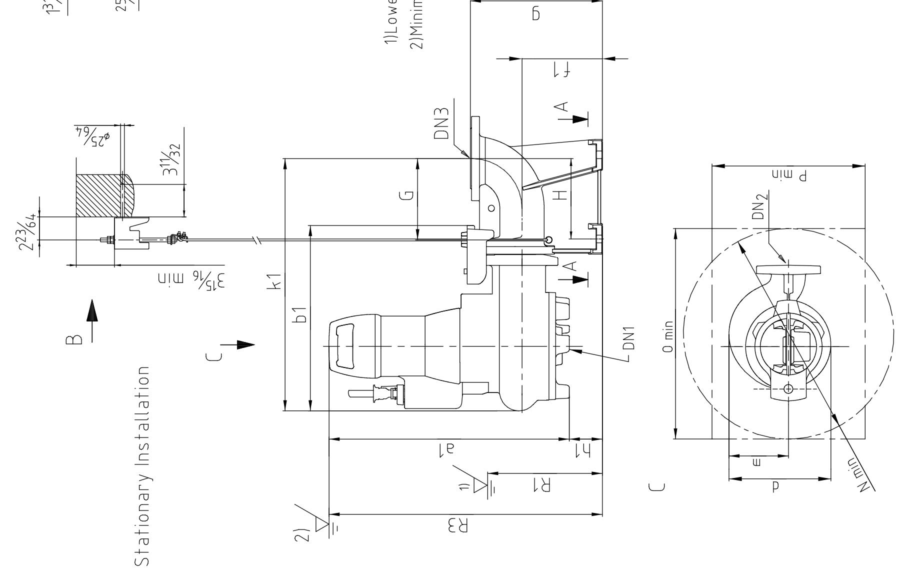

B

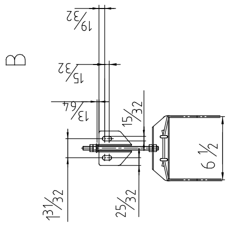

1)Lowest shut-off point for automatic operation
2)Minimum submergence for continuous operation

Flange of discharge elbow DN₃

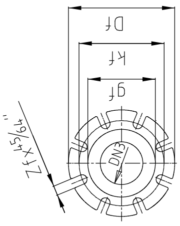

Flange of discharge elbow DN3					
	DN 3	gf	kf	Df	Zf
ASME 150 lb	3"	5	6	7³³⁄₆₄	4
	4"	6⁹⁄₆₄	7½	8²¹⁄₃₂	8

Portable version

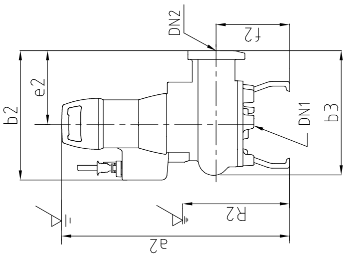

A- A

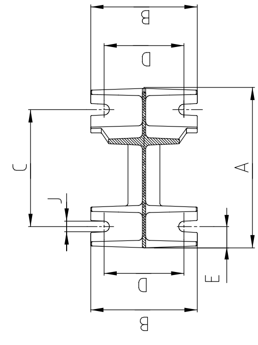

Foundation with guide rail									
DN 2	DN 3	A	B	C	D	E	G	H	J
3"	3"	1¹³⁄₁₆	7⅞	8²¹⁄₃₂	5²⁹⁄₃₂	1³⁷⁄₆₄	6²⁷⁄₆₄	6⁴⁵⁄₆₄	²⁵⁄₃₂
	4"								
4"	4"						8	8¹⁷⁄₆₄	

Amarex N.-WL ® YL				Pump														Foundation						ca.lbs
	DN1	DN2	DN3	a1	a2	b1	b2	b3	d	e 2	f 1	f 2	g	h 1	k 1	l 1	m	N	O	P	R 1	R 2	R 3	G
F 80-220	3"	3"	3" / 4"	22²⁹⁄₃₂	26²⁹⁄₆₄	18¹³⁄₁₆	15¹³⁄₆₄	15⁷⁄₁₆	12⁴³⁄₆₄	9³⁄₆₄	7⅞	7²³⁄₆₄	12¹⁹⁄₃₂	4³⁄₆₄	23²⁵⁄₃₂	27²¹⁄₆₄	6⁵⁹⁄₆₄	21²¹⁄₃₂	21²¹⁄₃₂	15¾	10⁵⁄₁₆	9⁵¹⁄₆₄	26³¹⁄₃₂	145
F 100-220	4"	4"	4"	23¾	27³¹⁄₆₄	18¾	15¹³⁄₆₄	15²³⁄₆₄	12³³⁄₆₄	9³⁄₆₄	8¹⁷⁄₆₄	8⁵⁄₃₂	13³⁷⁄₆₄	3⁵⁵⁄₆₄	25¹⁵⁄₆₄	27¹³⁄₆₄	6²¹⁄₃₂	21²¹⁄₃₂	21²¹⁄₃₂	15¾	10¹⁄₆₄	10²⁹⁄₃₂	27¹⁹⁄₃₂	148

532 182 ind 08

Dimensions Table Amarex N 80 and 100, Stationary Installation – Guide Rail Arrangement

DN 3 = 80/80 or 80/100 or 100/100: ASME = Standard

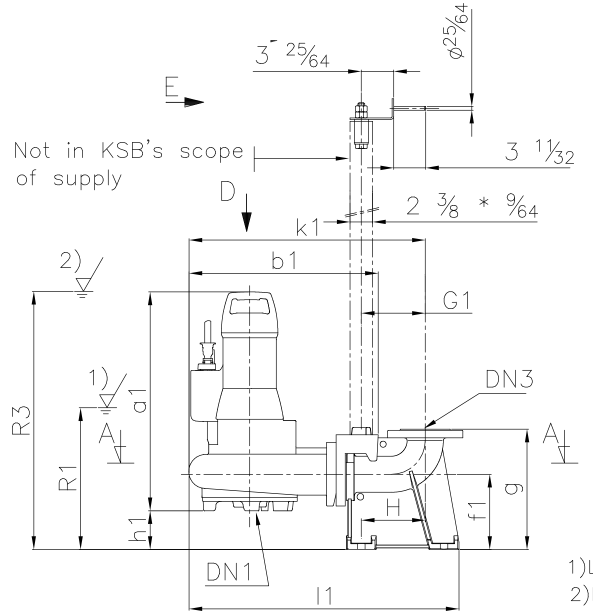

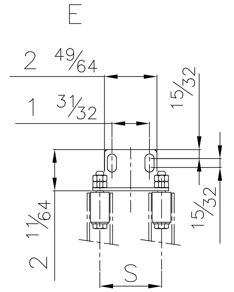

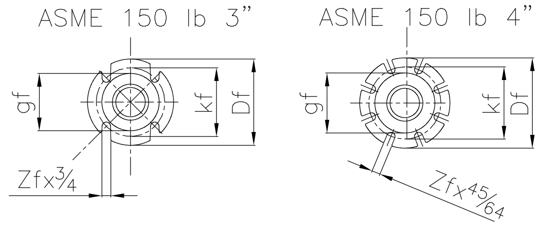

Flange of discharge elbow bend DN3	DN3	gf	kf	Df	Zf
ASME lb 150	3"	5	6	7 33/64	4
	4"	6 9/64	7 1/2	8 21/32	8

1)Lowest shut-off point for automatic operation
2)Minimum submergence for continuous operation

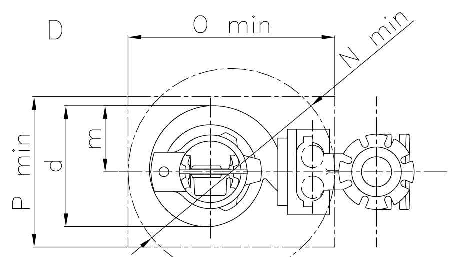

Foundation									
DN2	DN3	A	B	C	D	E	G1	H	J
3"	3"	11 13/16	7 7/8	8 21/32	5 29/32	1 37/64	6 1/16	6 1/16	25/32
	4"								
4"	4"						8 17/64	8 17/64	

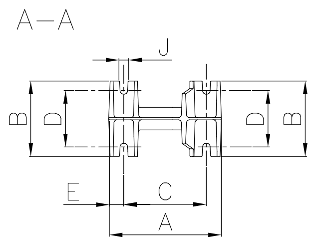

Amarex® N WL YL			Pump									Foundation						lbs
	DN1	DN2	DN3	a1	b1	d	f1	g	h1	k1	l1	m	N	O	P	R1	R3	S	G
F 80–220	3"	3"	3" / 4"	22 29/32	19 59/64	12 43/64	7 7/8	12 19/32	4 1/16	24 5/64	28 1/32	6 59/64	22 53/64	22 53/64	15 3/4	10 5/16	26 31/32	3 15/64	145
F 100–220	4"	4"	4"	23 3/4	20 53/64	12 33/64	8 17/64	13 37/64	3 55/64	26 17/32	28 1/2	6 21/32	23 5/8	23 5/8	15 3/4	11 1/32	27 19/32	3 15/64	147

532185 ind 09

General assembly drawing

YLG - WLG

Amarex N DN 50 ... 100
Motor
002 ... 042
004 ... 044

Description see page 26

Version monobloc
G / G1 / G2 / GH

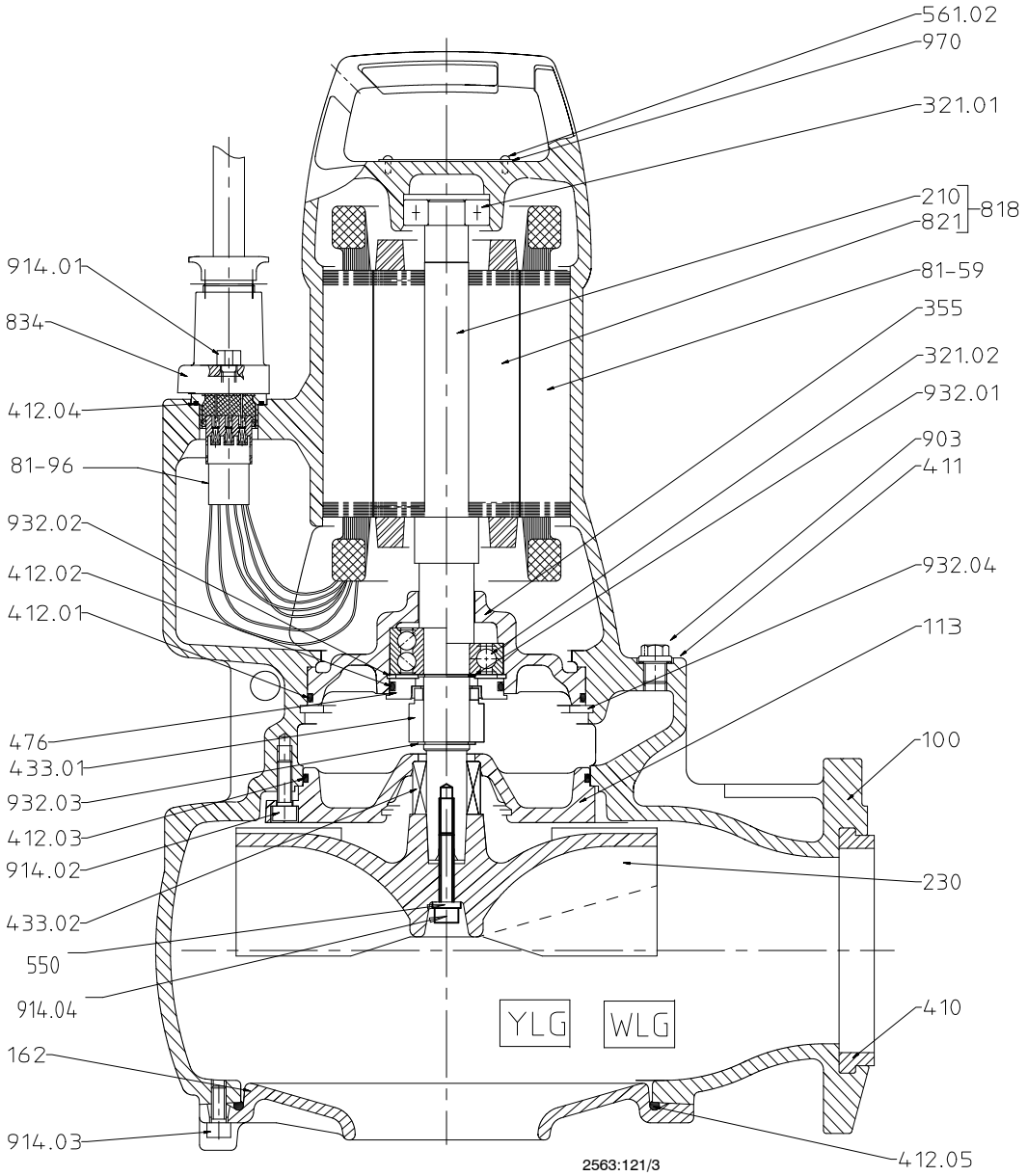

Mechanical seal – standard design

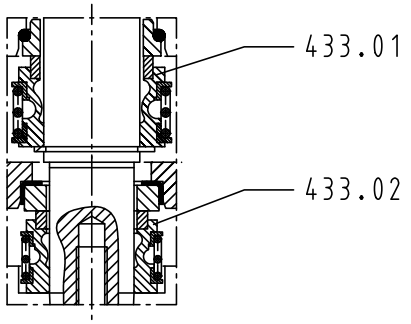

Mechanical seal – special design

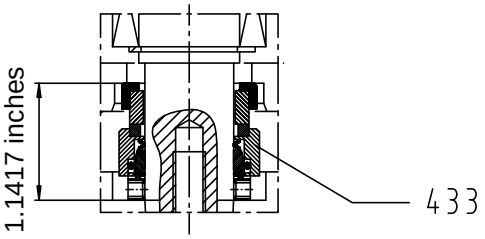

Exploded view

Amarex N - S 50

YLG - WLG

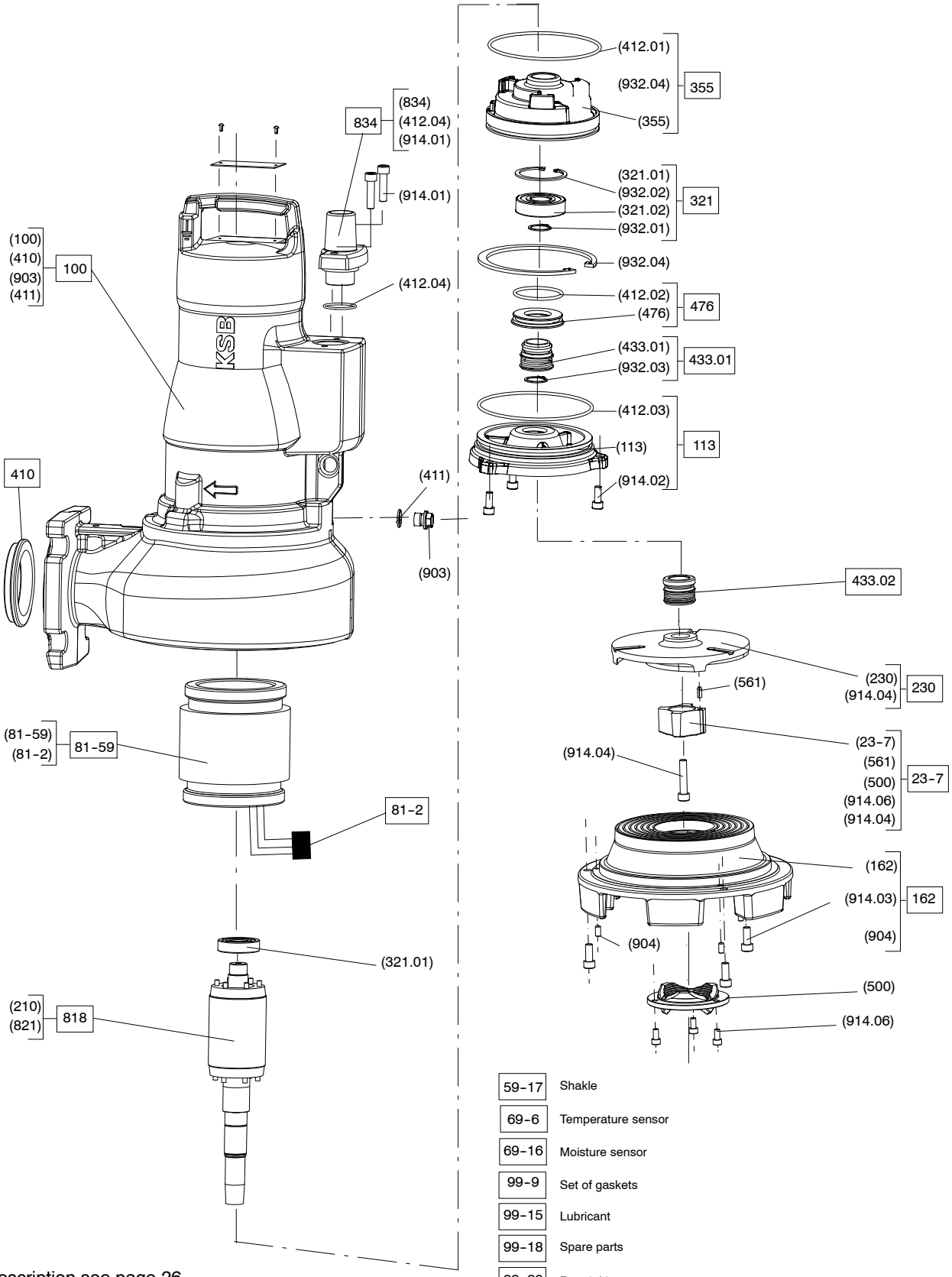

59-17	Shakle
69-6	Temperature sensor
69-16	Moisture sensor
99-9	Set of gaskets
99-15	Lubricant
99-18	Spare parts
99-20	Repair kit
182	Feet

Description see page 26

Amarex N - F 50 to 100

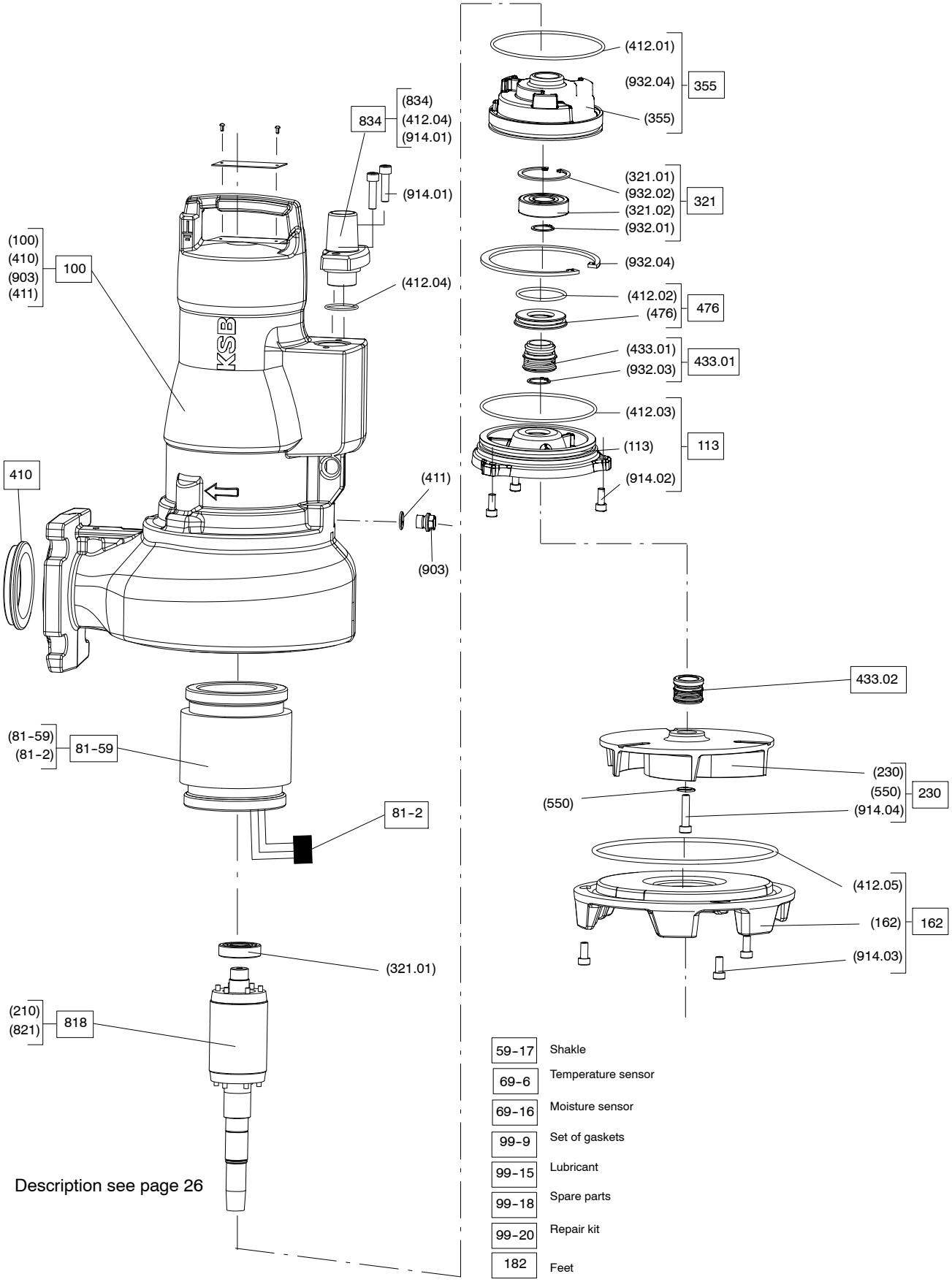

Description see page 26

Part no.	Description
100	Casing
113	Intermediate casing
162	Suction cover
23-7	Impeller body
210	Shaft
230	Impeller
321	Radial ball bearings
330	Bearing bracket
355	Bearing bracket housing
410	Profile joint
411	Joint ring
412	O-ring
433	Mechanical seal
476	Seat ring holder
59-31	Supporting clamp
500	Ring
550	Washer
561	Grooved pin
81-2	Plug
81-51	Shim
81-59	Stator
818	Rotor
821	Rotor laminations
834	Cable gland
903	Screwed plug
904	Set screw
914	Hex. socket head cap screw
932	Circlip
970	Name plate

Flamepaths on explosion-proof motors

Overview of flamepaths

Motor sizes

DKN 82 F 50-170
S 50-170
F 65-220

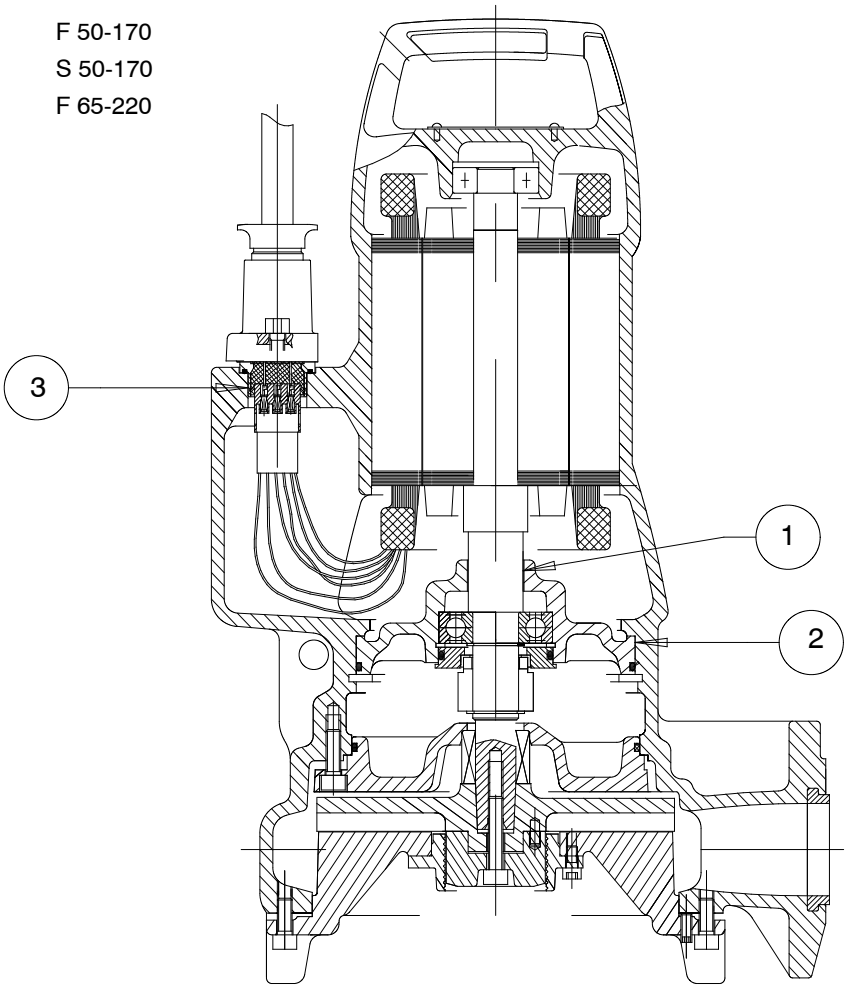

		Shaft	Pump casing	Cable gland
Flamepath number		1	2	3
Length of flamepath [mm]		≥ 12.5	≥ 12.5	≥ 12.5
Inside diameter (drilled hole) [mm]		30	142	32
Outside diameter (shaft) [mm]		29.9	142	32
Tolerance ISO inside diameter		F7	H8	H8
Tolerance ISO outside diameter		–	g6	–
Tolerance in µm inside diameter to DIN ISO 286/2	Maximum	+41	+63	+39
	Maximum	+20	0	0
Tolerance in µm outside diameter to DIN ISO 286/2	Maximum	–	–14	–
	Maximum	–	–39	–
Tolerance in µm inside diameter	Maximum	–	–	–
	Maximum	–	–	–
Tolerance in µm outside diameter	Maximum	–40	–	–25
	Maximum	–60	–	–75

Motor sizes

DKN 92 F 50-220
S 50-220
F 65-170
F 80-220
F 100-220

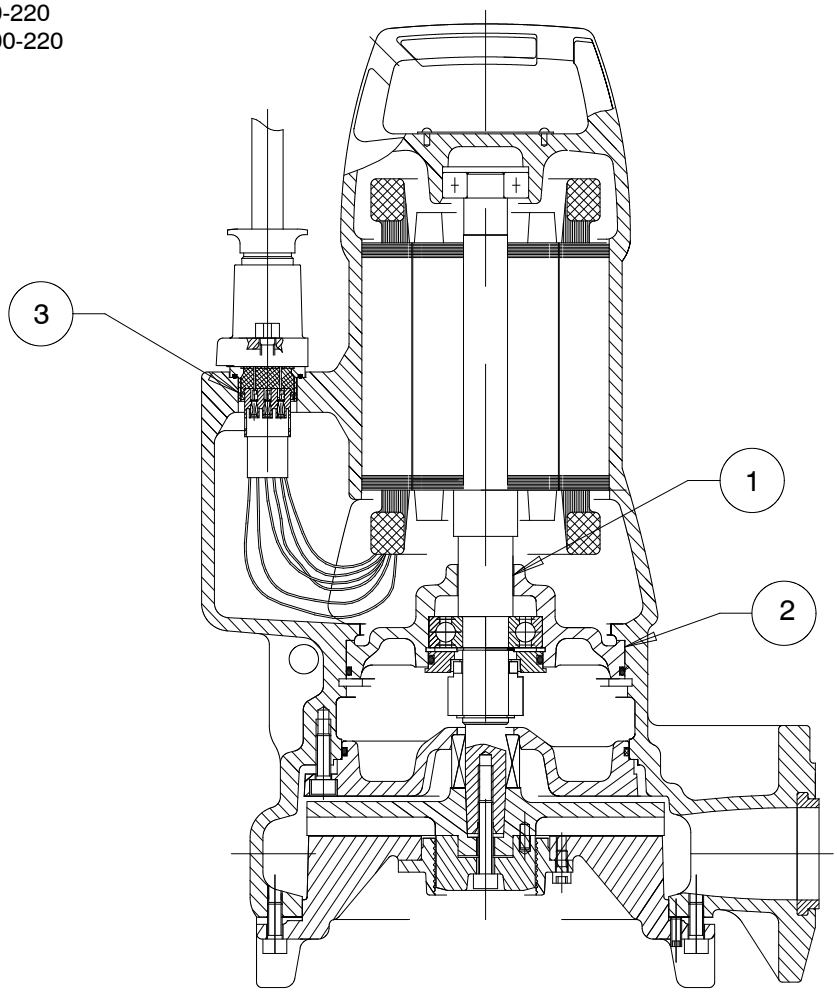

		Shaft	Pump casing	Cable gland
Flamepath number		1	2	3
Length of flamepath [mm]		≥ 12.5	≥ 12.5	≥ 12.5
Inside diameter (drilled hole) [mm]		30	152	32
Outside diameter (shaft) [mm]		29.9	152	32
Tolerance ISO inside diameter		F7	H8	H8
Tolerance ISO outside diameter		–	g6	–
Tolerance in µm inside diameter to DIN ISO 286/2	Maximum	+41	+63	+39
	Maximum	+20	0	0
Tolerance in µm outside diameter to DIN ISO 286/2	Maximum	–	–14	–
	Maximum	–	–39	–
Tolerance in µm inside diameter	Maximum	–	–	–
	Maximum	–	–	–
Tolerance in µm outside diameter	Maximum	–40	–	–25
	Maximum	–60	–	–75

Subject to technical modification without prior notice.

22.02.2012

2563.83/4-14

KSB, Inc.
4415 Sarellen Road • Richmond, VA 23231
Phone: (804) 222-1818 • Fax: (804) 226-6961 • www.ksbusa.com

KSB Pumps Inc
5885 Kennedy Road • Mississauga • Ontario L4Z 2G3
Phone: (905) 568-9200 • Fax: (905) 568-3740 • www.ksb.ca