Pressure Booster System

Hyamat SVP Eco

Installation/Operating Manual

KSB

Legal information/Copyright

Installation/Operating Manual Hyamat SVP Eco

Original operating manual

All rights reserved. The contents provided herein must neither be distributed, copied, reproduced, edited or processed for any other purpose, nor otherwise transmitted, published or made available to a third party without the manufacturer's express written consent.

Subject to technical modification without prior notice.

© KSB SE & Co. KGaA, Frankenthal 29/05/2019

Contents

Glossary **5**

1 General **6**
1.1 Principles 6
1.2 Software changes 6
1.3 Installation of partly completed machinery 6
1.4 Target group 6
1.5 Other applicable documents 6
1.6 Symbols 6
1.7 Key to safety symbols/markings 7

2 Safety **8**
2.1 General 8
2.2 Intended use 8
2.3 Personnel qualification and personnel training 8
2.4 Consequences and risks caused by non-compliance with this manual 9
2.5 Safety awareness 9
2.6 Safety information for the operator/user 9
2.7 Safety information for maintenance, inspection and installation 9
2.8 Unauthorised modes of operation 10

3 Transport/Temporary Storage/Disposal **11**
3.1 Checking the condition upon delivery 11
3.2 Transport 11
3.3 Storage/preservation 12
3.4 Return to supplier 12
3.5 Disposal 13

4 Description **14**
4.1 General description 14
4.2 Product information as per Regulation No. 1907/2006 (REACH) 14
4.3 Designation 14
4.4 Name plate 14
4.5 Design details 15
4.6 Configuration and function 16
4.7 Noise characteristics 17
4.8 Scope of supply 17
4.9 Dimensions and weights 18

5 Installation at Site **19**
5.1 Checks to be carried out prior to installation 19
5.2 Installing the pressure booster system 20
5.3 Mounting the accumulator 20
5.4 Connecting the piping 20
5.4.1 Fitting an expansion joint (optional) 22
5.4.2 Fitting the pressure reducer (optional) 22
5.5 Electrical connection 23
5.5.1 Sizing the power cable 23
5.5.2 Connecting the pressure booster system 24
5.5.3 Connecting the remote ON/OFF input 24
5.5.4 Connecting the dry running protection device 24

6 Commissioning/Start-up/Shutdown **25**
6.1 Commissioning/Start-up 25
6.1.1 Prerequisites for commissioning/start-up 25
6.1.2 Priming and venting the pressure booster system 25
6.1.3 Setting the dry running protection device 26

6.1.4 Start-up ... 27
6.1.5 Checklist for commissioning/start-up ... 27
6.2 Operating limits ... 28
6.2.1 Frequency of starts ... 28
6.2.2 Ambient conditions ... 28
6.2.3 Maximum operating pressure ... 28
6.2.4 Fluid handled ... 28
6.2.5 Minimum flow rate ... 29
6.3 Shutdown ... 29
6.3.1 Shutdown ... 29
6.3.2 Measures to be taken for shutdown ... 29

7 Operation ... 30
7.1 Operating a pressure booster system with PumpDrive 2 Eco ... 30
7.1.1 Standard control panel ... 30
7.2 Operating a pressure booster system with PumpDrive 2 ... 39
7.2.1 Graphical control panel ... 39
7.3 Adjusting the settings ... 47
7.3.1 Setting the setpoint ... 47
7.3.2 Changing the controller settings ... 47
7.4 Operating modes ... 48
7.4.1 Manual mode ... 48
7.4.2 Energy-saving mode ... 48

8 Servicing/Maintenance ... 49
8.1 General information/safety regulations ... 49
8.1.1 Inspection contract ... 49
8.2 Servicing/Inspection ... 50
8.2.1 Supervision of operation ... 50
8.2.2 Maintenance schedule ... 50
8.3 Setting the pre-charge pressure ... 51
8.4 Resetting dry running protection ... 52

9 Trouble-shooting ... 53
9.1 Trouble-shooting: pressure booster system ... 53
9.2 Trouble-shooting: frequency inverter ... 55

10 Related Documents ... 57
10.1 General assembly drawings with list of components ... 57
10.1.1 Hyamat SVP Eco with Movitec 2, 4, 6, 10, 15 ... 57
10.1.2 Hyamat SVP Eco with Movitec 25, 40, 60, 90 ... 59
10.2 Flow diagram ... 61

11 EU Declaration of Conformity ... 62

12 Certificate of Decontamination ... 63

13 Commissioning Report ... 64

Index ... 65

Glossary

Accumulator

Pressure losses may occur in the piping downstream of the pressure booster system as a result of losses due to leakage. The accumulator serves to compensate for pressure losses and minimises the frequency of starts of the pressure booster system.

Certificate of decontamination

A certificate of decontamination is enclosed by the customer when returning the product to the manufacturer to certify that the product has been properly drained to eliminate any environmental and health hazards arising from components in contact with the fluid handled.

Dry running protection

Dry running protection devices prevent the pump from being operated without the fluid to be handled, which would result in pump damage.

Energy-saving mode

Setting designed to avoid the energetically inefficient operation of a pump at minimum water consumption.

Manual mode

Direct operation on the power supply network, independently of the control unit.

PumpDrive

KSB frequency inverter mounted on the pump set.

Switchgear and controlgear assembly

Control cabinet with one or several control units / switchgears and electrical equipment.

1 General

1.1 Principles

This operating manual is valid for the type series and variants indicated on the front cover.

The operating manual describes the proper and safe use of this equipment in all phases of operation.

The name plate indicates the type series, the main operating data and the serial number. The serial number uniquely describes the product and is used as identification in all further business processes.

In the event of damage, immediately contact your nearest KSB service facility to maintain the right to claim under warranty.

1.2 Software changes

The software has been specially created for this product and thoroughly tested. Making changes or additions to the software or parts of the software is prohibited. This does not, however, apply to software updates supplied by KSB.

1.3 Installation of partly completed machinery

To install partly completed machinery supplied by KSB refer to the sub-sections under Servicing/Maintenance.

1.4 Target group

This operating manual is aimed at the target group of trained and qualified specialist technical personnel. (⇨ Section 2.3, Page 8)

1.5 Other applicable documents

Table 1: Overview of other applicable documents

Document	Contents
Sub-supplier product literature	Operating manuals, logic diagram and other product literature of accessories and integrated machinery components

1.6 Symbols

Table 2: Symbols used in this manual

Symbol	Description
✓	Conditions which need to be fulfilled before proceeding with the step-by-step instructions
▷	Safety instructions
⇨	Result of an action
⇨	Cross-references
1. 2.	Step-by-step instructions
	Note Recommendations and important information on how to handle the product

1.7 Key to safety symbols/markings

Table 3: Definition of safety symbols/markings

Symbol	Description
DANGER	**DANGER** This signal word indicates a high-risk hazard which, if not avoided, will result in death or serious injury.
WARNING	**WARNING** This signal word indicates a medium-risk hazard which, if not avoided, could result in death or serious injury.
CAUTION	**CAUTION** This signal word indicates a hazard which, if not avoided, could result in damage to the machine and its functions.
	General hazard In conjunction with one of the signal words this symbol indicates a hazard which will or could result in death or serious injury.
	Electrical hazard In conjunction with one of the signal words this symbol indicates a hazard involving electrical voltage and identifies information about protection against electrical voltage.
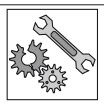	**Machine damage** In conjunction with the signal word CAUTION this symbol indicates a hazard for the machine and its functions.

2 Safety

DANGER

All the information contained in this section refers to hazardous situations.

In addition to the present general safety information the action-related safety information given in the other sections must be observed.

2.1 General

- This operating manual contains general installation, operating and maintenance instructions that must be observed to ensure safe operation of the system and prevent personal injury and damage to property.
- Comply with all the safety instructions given in the individual sections of this operating manual.
- The operating manual must be read and understood by the responsible specialist personnel/operators prior to installation and commissioning.
- The contents of this operating manual must be available to the specialist personnel at the site at all times.
- Information and markings attached directly to the product must always be complied with and kept in a perfectly legible condition at all times. This applies to, for example:
  - Arrow indicating the direction of rotation
  - Markings for connections
  - Name plate
- The operator is responsible for ensuring compliance with all local regulations not taken into account.

2.2 Intended use

- The pressure booster system must only be operated within the operating limits described in the other applicable documents.
- Only operate pressure booster systems which are in perfect technical condition.
- Do not operate partially assembled pressure booster systems.
- The pressure booster system must only handle the fluids described in the product literature of the respective design variant.
- Never operate the pressure booster system without the fluid to be handled.
- Observe the information on minimum flow rates specified in the product literature (to prevent overheating, bearing damage, etc).
- Observe the maximum flow rates indicated in the data sheet or product literature (to prevent overheating, cavitation damage, bearing damage, etc).
- Do not throttle the flow rate on the suction side of the pressure booster system (to prevent cavitation damage).
- Consult the manufacturer about any other modes of operation not described in the product literature.

2.3 Personnel qualification and personnel training

- All personnel involved must be fully qualified to install, operate, maintain and inspect the product this manual refers to.
- The responsibilities, competence and supervision of all personnel involved in transport, installation, operation, maintenance and inspection must be clearly defined by the operator.
- Deficits in knowledge must be rectified by means of training and instruction provided by sufficiently trained specialist personnel. If required, the operator can commission the manufacturer/supplier to train the personnel.
- Training on the pressure booster system must always be supervised by specialist technical personnel.

2.4 Consequences and risks caused by non-compliance with this manual

- Non-compliance with these operating instructions will lead to forfeiture of warranty cover and of any and all rights to claims for damages.
- Non-compliance can, for example, have the following consequences:
  - Hazards to persons due to electrical, thermal, mechanical and chemical effects and explosions
  - Failure of important product functions
  - Failure of prescribed maintenance and servicing practices
  - Hazard to the environment due to leakage of hazardous substances

2.5 Safety awareness

In addition to the safety information contained in this operating manual and the intended use, the following safety regulations shall be complied with:

- Accident prevention, health regulations and safety regulations
- Explosion protection regulations
- Safety regulations for handling hazardous substances
- Applicable standards, directives and laws

2.6 Safety information for the operator/user

- Fit protective equipment (e.g. contact guards) supplied by the operator for hot, cold or moving parts, and check that the equipment functions properly.
- Do not remove any protective equipment (e.g. contact guards) during operation.
- Eliminate all electrical hazards. (In this respect refer to the applicable national safety regulations and/or regulations issued by the local energy supply companies.)
- If shutting down the pump does not increase potential risk, fit an emergency-stop control device in the immediate vicinity of the pump (set) during pump set installation.

2.7 Safety information for maintenance, inspection and installation

- Modifications or alterations of the pressure booster system are only permitted with the manufacturer's prior consent.
- Use only original spare parts or parts authorised by the manufacturer. The use of other parts can invalidate any liability of the manufacturer for resulting damage.
- The operator ensures that maintenance, inspection and installation are performed by authorised, qualified specialist personnel who are thoroughly familiar with the manual.
- Carry out work on the pressure booster system during standstill only.
- The pump casing must have cooled down to ambient temperature.
- Pump pressure must have been released and the pump must have been drained.
- When taking the pressure booster system out of service always adhere to the procedure described in the manual.
- Decontaminate pressure booster systems which handle fluids posing a health hazard.
- As soon as the work has been completed, re-install and/or re-activate any safety-relevant and protective devices. Before returning the product to service, observe all instructions on commissioning.
- Make sure the pressure booster system cannot be accessed by unauthorised persons (e.g. children).
- Prior to opening the device, pull the mains plug and wait for at least 10 minutes.

2.8 Unauthorised modes of operation

Always observe the limits stated in the product literature.

The warranty relating to the operating reliability and safety of the pressure booster system supplied is only valid if the equipment is used in accordance with its intended use. (⇨ Section 2.2, Page 8)

3 Transport/Temporary Storage/Disposal

3.1 Checking the condition upon delivery

1. On transfer of goods, check each packaging unit for damage.
2. In the event of in-transit damage, assess the exact damage, document it and notify KSB or the supplying dealer and the insurer about the damage in writing immediately.

3.2 Transport

DANGER

Pressure booster system tipping over

Risk of injury by falling pressure booster system!

- Never suspend the pressure booster system by its power cable.
- Observe the applicable local accident prevention regulations.
- Observe the information on weights, centre of gravity and fastening points.
- Use suitable and permitted transport equipment, e.g. crane, forklift or pallet truck.
- To transport the pressure booster system, suspend it from the lifting tackle as illustrated.

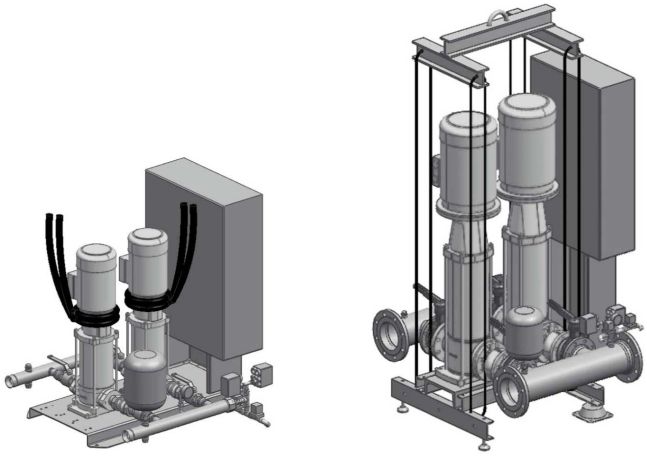

Movitec 2, 4, 6, 10, 15 Movitec 25, 40, 60, 90

Fig. 1: Attaching the lifting equipment to the system and transporting the system

✓ Transport equipment/lifting equipment suitable for the corresponding weight has been selected and is available.

1. Remove the packaging. Remove the caps from the connection openings.
2. Check for any in-transit damage.
3. Transport the pressure booster system to the place of installation.
4. Detach the pressure booster system from the pallet using a suitable tool.
5. Attach the pressure booster system to the lifting equipment as illustrated.
6. Lift it off the wooden skids. Dispose of the wooden skids.
7. Carefully place down the pressure booster system at the site of installation.

3.3 Storage/preservation

CAUTION

Damage during storage due to frost, moisture, dirt, UV radiation or vermin

Corrosion/contamination of pressure booster system!

▹ Store the pressure booster system in a frost-proof room. Do not store outdoors.

CAUTION

Wet, contaminated or damaged openings and connections

Leakage or damage of the pressure booster system!

▹ Only open the openings of the pressure booster system at the time of installation.

If commissioning is to take place some time after delivery, we recommend that the following measures be taken when storing the pressure booster system:

Store the pressure booster system in a dry, protected room where the atmospheric humidity is as constant as possible.

Table 4: Ambient conditions for storage

Ambient condition	Value
Relative humidity	50 % maximum
Ambient temperature	0 °C to +40 °C

- Frost-free
- Well-ventilated

3.4 Return to supplier

1. Drain the pressure booster system as per operating instructions.
2. Always flush and clean the pressure booster system, particularly if it has been used for handling noxious, explosive, hot or other hazardous fluids.
3. If the pressure booster system has handled fluids whose residues could lead to corrosion damage in the presence of atmospheric humidity or could ignite upon contact with oxygen, the pressure booster system must also be neutralised and treated with anhydrous inert gas to ensure drying.
4. Always complete and enclose a certificate of decontamination when returning the pressure booster system. (⇨ Section 12, Page 63)
   Always indicate any safety and decontamination measures taken.

NOTE

If required, a blank certificate of decontamination can be downloaded from the following web site: www.ksb.com/certificate_of_decontamination

3.5 Disposal

	⚠ WARNING **Fluids handled, consumables and supplies which are hot and/or pose a health hazard** Hazard to persons and the environment! ▹ Collect and properly dispose of flushing fluid and any fluid residues. ▹ Wear safety clothing and a protective mask if required. ▹ Observe all legal regulations on the disposal of fluids posing a health hazard.

1. Dismantle the pressure booster system.
   Collect greases and other lubricants during dismantling.
2. Separate and sort the pump materials, e.g. by:
   - Metals
   - Plastics
   - Electronic waste
   - Greases and other lubricants
3. Dispose of materials in accordance with local regulations or in another controlled manner.

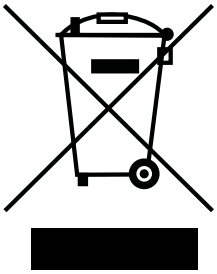

Electrical or electronic equipment marked with the adjacent symbol must not be disposed of in household waste at the end of its service life.

Contact your local waste disposal partner for returns.

If the used electrical or electronic equipment contains personal data, the operator is responsible for deleting it before the equipment is returned.

4 Description

4.1 General description

- Pressure booster system

4.2 Product information as per Regulation No. 1907/2006 (REACH)

For information as per chemicals Regulation (EC) No 1907/2006 (REACH), see http://www.ksb.com/reach.

4.3 Designation

Example: Hyamat SVP Eco 4 / 0408 / 1,2 - 3,5

Table 5: Designation key

Code	Description
Hyamat	Pressure booster system
SVP	All pump sets are variable speed versions.
Eco	Control system integrated in the frequency inverter
4	Number of pumps
04	Pump size
08	Number of stages
1,2	Minimum inlet pressure [bar]
3,5	Maximum usable inlet pressure [bar]

4.4 Name plate

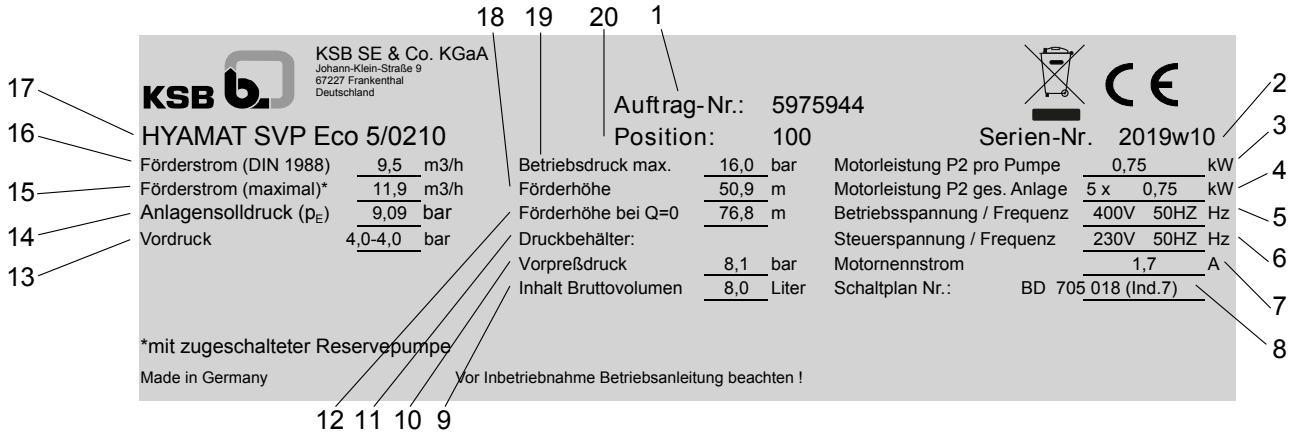

Fig. 2: Name plate (example)

1	Order number	11	Accumulator
2	Production year and production week	12	Head at Q = 0
3	Motor power P2, per pump set	13	Inlet pressure
4	Motor power P2, overall pressure booster system	14	System setpoint pressure
5	Operating voltage, frequency	15	Maximum permissible flow rate
6	Control voltage, frequency	16	Flow rate (to DIN 1988)
7	Nominal current of pump set	17	Type series
8	Circuit diagram	18	Head
9	Gross vol. content	19	Maximum operating pressure
10	Pre-charge pressure	20	Order item number

4.5 Design details

Design

- Fully automatic pressure booster package system
- Baseplate-mounted
- Two to six vertical high-pressure centrifugal pumps with variable speed control
- Hydraulic components made of stainless steel / brass
- 1 check valve and 1 shut-off valve per pump set to DIN / DVGW
- Discharge-side, direct-flow membrane-type accumulator, approved for drinking water
- Pressure gauge
- Pressure transmitters on the inlet side and discharge side
- Design and function as per EN 806-2, DIN 1988-500

Pressure booster system with Movitec 2B, 4B, 6B, 10B and 15B:

- Anti-vibration pads per pump

Pressure booster system with Movitec 25B, 40B, 60B and 90B:

- Level-adjustable feet and rubber pads (supplied but not fitted)

Installation

- Stationary dry installation

Drive

- High-efficiency, magnet-less KSB SuPremE motor
- Efficiency class IE4/IE5 to IEC TS 60034-30-2:2016

Automation

- Frequency inverter
- Control and monitoring system for the pumps integrated in the frequency inverter
- Control panel (display, keys, LEDs, service interface)
- Motor protection switch per pump
- Lockable master switch (repair switch)
- Pressure transmitters on the inlet side and discharge side
- Circuit diagram to VDE and parts list for electric parts
- Terminal strip/terminals with identification for all connections
- Terminal connection for digital dry running protection
- Remote ON/OFF input
- Field bus connection (optional)

4.6 Configuration and function

Fig. 3: Illustration of pressure booster system

1	Control cabinet	4	Manifold
2	Motor with variable speed system	5	Baseplate
3	High-pressure centrifugal pump		

Design The fully automatic pressure booster system is equipped with two to six vertical variable speed high-pressure centrifugal pumps (4) for pumping the fluid handled to the consumer installations in the set pressure range.

Function Motor-mounted frequency inverters (2) control and monitor two to six high-pressure pumps (3). Each pump set is operated on a motor-mounted variable speed system (frequency inverter) and controlled so as to ensure a constant discharge pressure of the pressure booster system. As the demand increases or decreases, peak load pumps are started and stopped automatically.

As soon as the demand increases again after one pump set has been stopped, another pump set which has not been in operation before is started up. When the last pump set has been stopped and the demand increases again, the next pump set in line is started up. The stand-by pump is also included in the alternating cycle. The actual pressure is measured by means of an analog pressure gauge (pressure transmitter) which is monitored by integrated broken wire detection (4-20 mA). In the standard setting, the pressure booster system starts up and stops automatically. The pump sets are started and stopped as a function of demand. Variable speed control reduces the frequency of starts of the pump sets in parallel operation. If a pump set that is in operation fails, the next pump set is started up immediately. If the demand drops towards 0, the pressure booster system slowly runs down to the stop point. A fault message can be transmitted via volt-free contacts, e.g. to a control station. The operating status is displayed via LEDs.

4.7 Noise characteristics

The pressure booster system is available with different numbers and sizes of pumps. For the noise characteristics refer to the operating manual of the pump set. To calculate the expected total sound pressure level, add*** a defined value*** to the individual pump set's expected sound pressure level.

Table 6: Values for calculating the total expected sound pressure level

Number of pump sets	Value
	dB(A)
2	+ 3
3	+ 4.5
4	+ 6
5	+ 7
6	+ 7.5

Example Pressure booster system with 4 pump sets (value + 6 dB(A))

Single pump = 48 dB(A)

48 dB(A) + 6 dB(A) = 54 dB(A)

The expected total sound pressure level of 54 dB(A) may develop when all 4 pump sets are running under full-load conditions.

4.8 Scope of supply

Depending on the model, the following items are included in the scope of supply:

Pressure booster system

- Two to six vertical high-pressure centrifugal pumps
- Discharge-side, direct-flow membrane-type accumulator, approved for drinking water
- 1 check valve and 1 shut-off valve per pump set to DIN / DVGW
- Pressure transmitters on the inlet side and discharge side
- Pressure gauge
- Powder-coated / epoxy resin-coated steel baseplate

For Movitec 2B, 4B, 6B, 10B and 15B:

- With oval flange/round flange
- Pumps mounted on the baseplate with anti-vibration mounts

For Movitec 25B, 40B, 60B and 90B:

- With round flange
- Pressure booster system with level-adjustable feet and rubber pads (supplied but not fitted)

Control unit

- Frequency inverter
- Control and monitoring system for the pumps integrated in the frequency inverter
- Control panel (display, keys, LEDs, service interface)
- Motor protection switch per pump
- Lockable master switch (repair switch)
- Terminal strip/terminals with identification for all connections
- Circuit diagram and list of electric components
- Terminal connection for digital dry running protection
- Remote ON/OFF input

4.9 Dimensions and weights

For dimensions and weights refer to the outline drawing.

5 Installation at Site

5.1 Checks to be carried out prior to installation

⚠ WARNING

Installation on mounting surfaces which are unsecured and cannot support the load

Personal injury and damage to property!

- ▹ Use a concrete of compressive strength class C12/15 which meets the requirements of exposure class X0 to EN 206-1.
- ▹ The mounting surface must have set and must be completely horizontal and even.
- ▹ Observe the weights indicated.

NOTE

The anti-vibration mounts provide adequate insulation against solid-borne noise.

NOTE

Do not install pressure booster systems next to sleeping or living quarters.

Before beginning with the installation check the following:

- All structural work required has been checked and prepared in accordance with the dimensions in the outline drawing.
- The pressure booster system can be operated on the power supply network according to the data on the name plate. (⇨ Section 4.4, Page 14)
- The place of installation is frost-free.
- The place of installation can be locked.
- The place of installation is well-ventilated.
- A suitably dimensioned drain connection (e.g. leading to a sewer) is available.
- If expansion joints are used, take note of its creep resistance. Expansion joints must be easily replaceable.

5.2 Installing the pressure booster system

⚠ WARNING

Top-heavy pressure booster system

Risk of personal injury by pressure booster system tipping over!

- ▹ Pressure booster systems awaiting final installation must be secured against tipping over.
- ▹ Firmly anchor the pressure booster system.

NOTE

To prevent the transmission of piping forces and solid-borne noise, installing expansion joints with length-limiters is recommended.

- ✓ The pressure booster system's packaging has been removed.
- ✓ A suitable installation site has been selected that meets the requirements.
- ✓ Sufficient clearance in all directions is provided for servicing work.

1. Mark out the anchoring holes on the floor as shown in the outline drawing.
2. Drill the holes (max. diameter: 12 mm).
3. Insert plug fixings of appropriate size.
4. Place the pressure booster system in its correct installation position.
5. Use suitable bolts to firmly anchor the pressure booster system.

5.3 Mounting the accumulator

CAUTION

Dirt in the pressure booster system

Damage to the pump sets!

- ▹ Clean the accumulator before filling it.

- ✓ The original operating manual of the pressure booster system is on hand.

1. Mechanically and electrically connect the accumulator in accordance with the original operating manual supplied.

5.4 Connecting the piping

CAUTION

Air pockets in suction line

Pressure booster system cannot prime!

- ▹ Lay the pipe with a continuously rising slope.

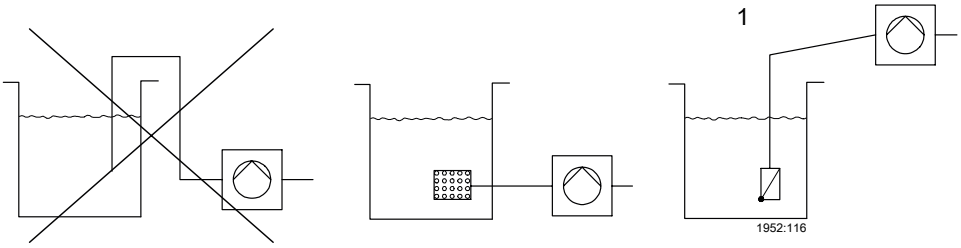

Fig. 4: Correct piping connection

1	Suction lift operation

1. Install the piping without transmitting any stresses and strains.
2. Connect the piping to the distribution lines on the inlet side and discharge side.

5.4.1 Fitting an expansion joint (optional)

DANGER

Sparks and radiant heat

Fire hazard!

- ▹ Take suitable precautions to protect the expansion joint if any welding work is carried out.

CAUTION

Leaking expansion joint

Flooding of installation room!

- ▹ Do not apply any paint to the expansion joint.
- ▹ Keep the expansion joint clean.
- ▹ Regularly check for cracks or blisters, exposed fabric or other defects.

✓ Sufficient clearance in all directions is provided for checking the expansion joint.

✓ The expansion joint is not insulated along with the pipeline insulation.

1. The expansion joint has a length limiter with solid-borne sound insulation.
2. Install the expansion joint in the piping free of twist or distortion. Never use the expansion joint to compensate for misalignment or mismatch of the piping.
3. Evenly tighten the bolts crosswise. The ends of the bolts must not protrude from the flange.

5.4.2 Fitting the pressure reducer (optional)

NOTE

A pipe length of approximately 600 mm must be provided on the inlet side to accommodate a pressure reducer, if necessary.

NOTE

A pressure reducer must be installed if the inlet pressure fluctuation is too high for the pressure booster system to operate as intended or if the total pressure (inlet pressure and shut-off head) exceeds the design pressure.

The inlet pressure (p_{inl}) varies between 4 and 8 bar. A minimum pressure gradient of 5 m is required for the pressure reducer to function properly. This means that the pressure reducer must be mounted 5 m higher than the pressure booster system. The pressure drops by about 0.1 bar per metre of height difference. Alternatively, the pressure reducer can be subjected to a pressure of 0.5 bar.

Example p_{inl} = 4 bar

Minimum pressure gradient = 5 m ≙ 0.5 bar

Downstream pressure: 4 bar - 0.5 bar = 3.5 bar.

✓ A minimum pressure gradient of 5 m is available.

1. Install the pressure reducer in the pipe on the inlet side.

5.5 Electrical connection

DANGER

Electrical connection work by unqualified personnel

Danger of death from electric shock!

- ▹ Always have the electrical connections installed by a trained and qualified electrician.
- ▹ Observe regulations IEC 60364.

WARNING

Incorrect connection to the mains

Damage to the mains network, short circuit!

- ▹ Observe the technical specifications of the local energy supply companies.

NOTE

Installing a motor protection device is recommended.

NOTE

If a residual current device is installed, observe the operating manual for the frequency inverter.

Lightning protection

- Electrical installations must be protected against overvoltage (compulsory since 14 December 2018) (see DIN VDE 0100-443 (IEC60364-4-44:2007/A1:2015, modified) and DIN VDE 0100-534 (IEC 60364-5-53:2001/A2:2015, modified). Whenever modifications are made to existing installations, retrofitting a surge protective device (SPD) in accordance with VDE is mandatory.
- A maximum cable length of 10 metres should not be exceeded between the surge protective device (usually type 1, internal lightning protection) installed at the service entrance and the equipment to be protected. For longer cables, additional surge protective devices (type 2) must be provided in the sub-distribution board upstream of the equipment to be protected or directly in the equipment itself.
- The associated lightning protection concept must be provided by the operator or by a suitable provider commissioned by the operator. Surge protective devices can be offered for the control units on request.

Wiring diagram

The wiring diagrams are located in the control cabinet, which is where they must be stored.
The product literature of the switchgear and controlgear assembly supplied with the system includes a list of the electrical components installed. When ordering spare parts for electrical components, always indicate the number of the wiring diagram.

Terminal assignment

For the terminal assignment refer to the wiring diagram.

5.5.1 Sizing the power cable

Determine the cross-section of the power cable based on the total rated power required.

5.5.2 Connecting the pressure booster system

✓ The pressure booster system can be operated on the power supply network in accordance with the data on the name plate.

✓ The wiring diagram is available.

1. Connect terminals L1, L2, L3, PE and N in accordance with the wiring plan.
2. Connect the potential equalisation conductor on the baseplate to the terminal with the earthing symbol.

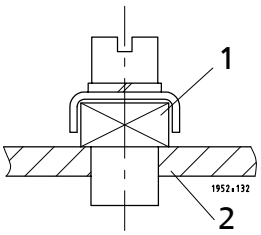

Fig. 5: Connecting the potential equalisation conductor

1	Earthing terminal	2	Baseplate

3. Connect the remote ON/OFF input. (⇨ Section 5.5.3, Page 24)
4. Connect the dry running protection device. (⇨ Section 5.5.4, Page 24)

5.5.3 Connecting the remote ON/OFF input

1. Establish the connection in accordance with the wiring diagram.

5.5.4 Connecting the dry running protection device

✓ The original operating manual of the dry running protection device is on hand.

1. Fit the dry running protection device in accordance with the supplied original operating manual. Connect it in the control unit in accordance with the supplied original operating manual.

6 Commissioning/Start-up/Shutdown

6.1 Commissioning/Start-up

6.1.1 Prerequisites for commissioning/start-up

CAUTION

Pump set running dry

Damage to the pump set/pressure booster system!

- ▹ Use dry running protection. If the dry running protection terminal is disabled by means of a bridge, the operator shall assume responsibility for any dry running that might occur.

Ensure that the following requirements are met prior to commissioning/start-up:

- The pressure booster system has been properly connected to the electric power supply and is equipped with all protection devices.
- All relevant VDE standards and/or regulations applicable in the country of use are complied with.
- The dry running protection device has been installed. (⇨ Section 5.5.4, Page 24)

6.1.2 Priming and venting the pressure booster system

CAUTION

Foreign matter in the piping

Damage to the pumps/pressure booster system!

- ▹ Before commissioning/starting (or even test running) the pressure booster system, make sure that there is no foreign matter in the pressure booster system or piping.

CAUTION

Operation without the fluid to be handled

Damage to the pump sets!

- ▹ Prime the pressure booster system with the fluid to be handled.

NOTE

Prior to its delivery, the pressure booster system will be tested hydraulically with water and then drained again. For technical reasons the presence of some residual water is unavoidable.

Prior to commissioning/start-up observe EN 806. After prolonged standstill periods, flushing or professional disinfection is recommended. For extensive or branched piping systems, flushing the pressure booster system can be restricted to a limited area.

NOTE

Minor leakage of the mechanical seals during commissioning is normal and will cease after a short period of operation.

Have commissioning carried out by specialist KSB staff.

- ✓ The original operating manual of the pump set is on hand.
- ✓ The pipe unions between the pump set and the piping have been re-tightened.
- ✓ The flange bolting has been checked for firm seating.

✓ The cooling air inlet openings and cooling air outlet openings on the motor are unobstructed.

✓ All shut-off valves are open.

✓ The pre-charge pressure of the accumulator has been checked. (⇨ Section 8.3, Page 51)

✓ The minimum flow rate has been observed. (⇨ Section 6.2.5, Page 29)

1. Set the master switch to 0; unlock all motor protection switches (if applicable).
2. Provide connection to power supply.
3. Open the vent plugs on the pump set in accordance with the supplied original operating manual of the pump set.
4. Slowly open the inlet-side shut-off element and prime the pressure booster system until the fluid to be handled escapes through all vent holes.
5. Close and slightly tighten the pump vent plugs.
6. Switch on all motor protection switches.
7. If fitted, set the manual-0-automatic selector switches to “automatic”.
8. Switch on the master switch.
9. Open the discharge-side valve.
10. When all pump sets are running, loosen the vent plugs again to let any remaining air escape.
11. Close the vent plug.
12. Check that the pump sets are running smoothly.
13. Close the discharge-side valve in order to verify whether the pump sets reach the maximum shut-off head.
14. Open the discharge-side valve.
15. Set the dry running protection device. (⇨ Section 6.1.3, Page 26)

6.1.3 Setting the dry running protection device

Dry running protection devices are available in the form of pressure switches. The dry running protection devices are set to the values specified in the order. If the settings do not match the site data, adjust the settings for dry running protection.

Pressure switch

✓ The original operating manual of the pressure switch is on hand.

1. Undertake settings in accordance with the operating manual of the pressure switch.

Table 7: Recommended settings for pressure switches

Stop pressure	Start-up pressure
0.5 bar below p_{inl}	0.2 bar below p_{inl}

6.1.4 Start-up

NOTE

The pressure booster system is factory-set to the data indicated on the name plate.

Standard design

✓ The pressure booster system has been primed and vented.

1. Switch on the master switch.

⇨ The green LED lights up and signals the system's readiness for operation.

Additional instruments

✓ The pressure booster system has been primed and vented.

1. Set the manual-0–automatic selector switch to automatic.

⇨ The green LED lights up and signals the system's readiness for operation.

6.1.5 Checklist for commissioning/start-up

Table 8: Checklist

Steps to be carried out	Action	Done
1	Read the operating manual.	
2	Compare the power supply data against the name plate data.	
3	Check the earthing system/take measurements.	
4	Check the mechanical connection to the water mains. Re-tighten the flange and pipe unions.	
5	Prime and vent the pressure booster system from the inlet side.	
6	Check the inlet pressure.	
7	Check whether all cables are firmly connected to the terminals inside the control unit.	
8	Compare the settings of the motor protection switches with the name plate data and re-adjust if necessary.	
9	Check the start-up pressure and the stop pressure; re-adjust if necessary.	
10	Test the proper function of the dry running protection equipment. If not fitted, make a relevant note in the commissioning report.	
11	After the pump sets have been running for 5 to 10 minutes, vent them again.	
12	Set all switches to automatic.	
13	Check the pre-charge pressure.	
14	Enter any deviations from the name plate or order documentation in the commissioning report.	
15	Complete the commissioning report together with the operator/user and instruct the operator/user as to the function of the unit.	

6.2 Operating limits

DANGER

Non-compliance with operating limits

Damage to the pump set!

- Comply with the operating data indicated in the data sheet.
- Avoid operation against a closed shut-off element.
- Never operate the pump set outside the limits specified below.

DANGER

Non-compliance with operating limits for the fluid handled

Explosion hazard!

- Never use the pump to handle different fluids which might react chemically with each other.
- Never use the pump to handle a flammable fluid with a fluid temperature above the ignition temperature.

6.2.1 Frequency of starts

To prevent high temperature increases in the motor and impermissible loads on the pump, motor, seals and bearings, do not exceed a certain number of starts per hour. See original operating manual of the pump sets.

6.2.2 Ambient conditions

Observe the following parameters and values during operation:

Table 9: Permissible ambient conditions

Ambient condition	Value
Ambient temperature	0 °C to +40 °C
Relative humidity	50 % maximum

6.2.3 Maximum operating pressure

CAUTION

Permissible operating pressure exceeded

Damage to connections and seals!

- Never exceed the operating pressure specified in the data sheet.

The maximum operating pressure equals 16, 25 or 40 bar, depending on the design variant. See name plate. (⇨ Section 4.4, Page 14)

6.2.4 Fluid handled

6.2.4.1 Permissible fluids to be handled

- Clean fluids not chemically or mechanically aggressive to the pump materials
- Drinking water
- Service water
- Cooling water

6.2.4.2 Fluid temperature

Table 10: Temperature limits of the fluid handled

Permissible fluid temperature	Value
Maximum	+70 °C 25 °C to DIN 1988 (DVGW)[1)]
Minimum	0 °C

6.2.5 Minimum flow rate

Table 11: Minimum flow rate per pump in manual mode

Size	Minimum flow rate per pump
	[l/h]
Movitec 2B	200
Movitec 4B	400
Movitec 6B	600
Movitec 10B	1100
Movitec 15B	1600
Movitec 25B	2800
Movitec 40B	4600
Movitec 60B	6100
Movitec 90B	8500

6.3 Shutdown

6.3.1 Shutdown

Standard design

1. Set the master switch to 0.

Additional instruments

1. Set manual-0-automatic selector switch to 0.

6.3.2 Measures to be taken for shutdown

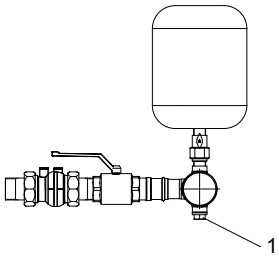

Fig. 6: Venting and draining the accumulator

1	Vent plug

✓ The pressure booster system has been switched off. (⇨ Section 6.3.1, Page 29)

1. Loosen vent plug 1 at the accumulator.
   ⇨ The pressure booster system is being vented and drained.
2. Re-tighten vent plug 1 on the accumulator.

1) Applies to the handling of water (Germany only)

7 Operation

	CAUTION
	Incorrect operation Water supply is not assured! ▹ Make sure to comply with all local regulations, particularly the EC Machinery Directive and the EC Directive on Low-Voltage Equipment.

The pressure booster system is factory-set to the start-up pressure and stop pressure indicated on the name plate. If the settings do not match the site data, adjust and reset as necessary via the control panel.

The procedure for this depends on the frequency inverter version.

- PumpDrive 2 Eco (⇨ Section 7.1, Page 30)
- PumpDrive 2 (⇨ Section 7.2, Page 39)

7.1 Operating a pressure booster system with PumpDrive 2 Eco

7.1.1 Standard control panel

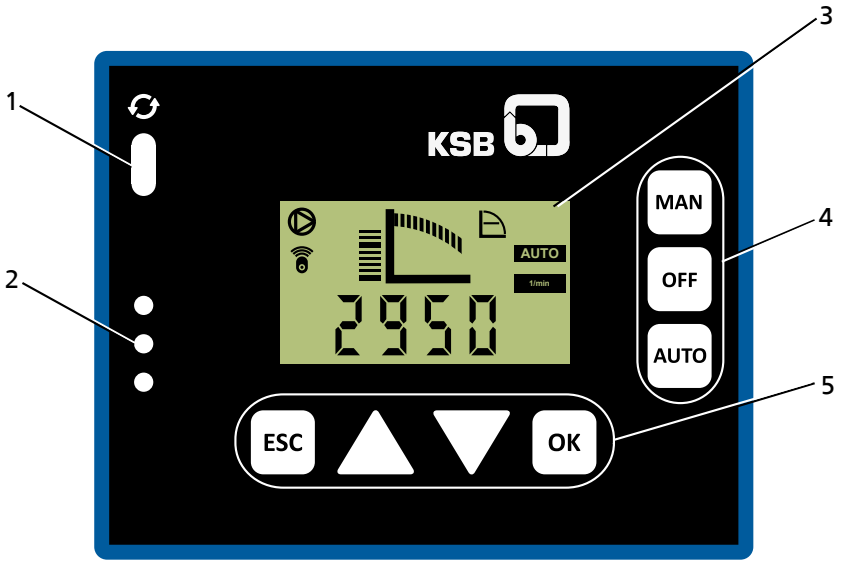

Fig. 7: Standard control panel

Table 12: Description of standard control panel

Item	Description	Function
1	Service interface	Optical interface
2	LED traffic light function	The traffic light function provides information about the system's operating status.
3	Display	Displays information on frequency inverter operation
4	Operating keys	Toggling operating modes
5	Navigation keys	Navigation and parameter setting

7.1.1.1 Display

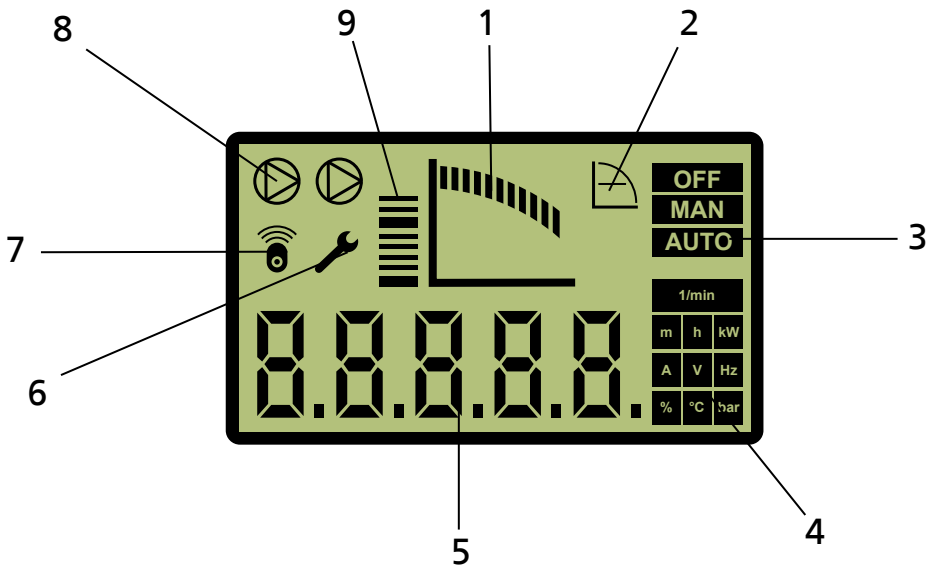

Fig. 8: Main screen (example)

1	Operating point display
2	Type of control
3	Display of the current operating mode
4	Units
5	Menu, parameter number, parameter values
6	Log in as customer
7	Active wireless connection The wireless icon illuminates when the Bluetooth module is inserted. The wireless icon flashes when communication takes place.
8	Single/dual pump
9	Rotational speed 0 - 100 %

Table 13: Menu, parameter number, parameter values, messages

Display	Function
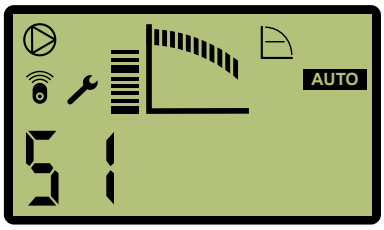 Menu example: Open-loop Control	Menu example: Open-loop Control (1-3): ▪ The letter S is used as the first character to identify a menu. ▪ The second character identifies the first menu level, i.e. Operation S1-x-x-x, Diagnosis S2-x-x-x, Settings S3-x-x-x and Information S4-x-x-x. ▪ The wrench icon shows that you have logged in as a customer.
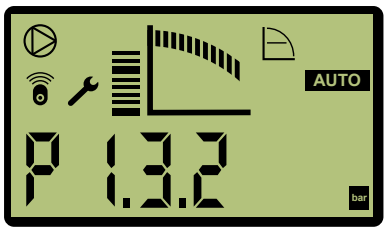 Parameter number example: Setpoint (Closed-loop Control)	Parameter number example: Setpoint (Closed-loop Control) (1-3-2): ▪ The letter P is used as the first character to identify a parameter number. ▪ The following characters show the parameter number. ▪ The wrench icon shows that you have logged in as a customer.

Display	Function
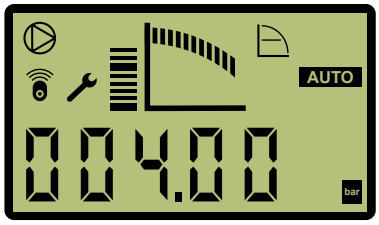 Parameter value example: Setpoint (Closed-loop Control)	Parameter value example: Setpoint (Closed-loop Control) (1-3-2) set to 4 bar: ▪ If a parameter value can be edited, the digit flashes. ▪ The wrench icon shows that you have logged in as a customer.
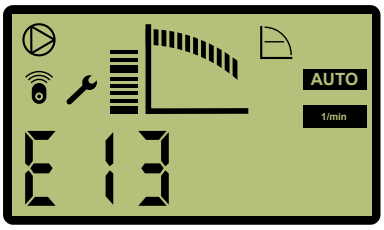 Message example: Dry running	Message example: Dry running (E13): ▪ A message is identified by the letter E (Error) and a unique number.

Table 14: Assignment of keys

Key	Function
▲ ▼	**Arrow keys:** ▪ Move up/down in the menu options. ▪ Increase/decrease a numerical value. (When an arrow key is pressed and held down, the response repeats in ever shorter intervals.)
ESC	**Escape key:** ▪ Delete/reset entry (the entry is not saved). ▪ Move up one menu level.
OK	**OK key:** ▪ Confirm settings. ▪ Confirm menu selection. ▪ Move to the next digit when entering numerals. ▪ Message display: Acknowledge alert. ▪ Measured value display: Go to Favourites menu.
MAN	MAN operating key: ▪ Starts the frequency inverter in manual operating mode.
OFF	OFF operating key: ▪ Stops the frequency inverter.
AUTO	AUTO operating key: ▪ Switches to automatic operating mode.

Manual mode via control panel

	NOTE
	After a power failure, the frequency inverter reverts to the OFF operating mode. Manual mode must be restarted.

Table 15: Assignment of keys for manual mode

Key	Function
MAN	MAN operating key: ▪ When switching the operating mode from AUTO to MAN, the current operating speed is used as control value (Manual) *1-3-4* and is displayed accordingly. The control point *1-3-10* must be set to Local. ▪ When switching the operating mode from OFF to MAN, the frequency inverter operates at minimum speed. The control point *1-3-10* must be set to Local. ▪ If the control value (Manual) *1-3-4* is defined via an analog input, the analog input speed is accepted.
▲ ▼	**Arrow keys:** ▪ Pressing the arrow keys changes and immediately accepts the control value (Manual) *1-3-5*. Making a change using the arrow key has a direct effect even when not confirmed with OK. The speed can only be changed between the set minimum speed and the maximum speed.
ESC OK	**ESC/OK key:** ▪ Press the OK or ESC key to go from digit to digit. Press the ESC key to go back. Changes are rejected. Pressing the OK key for the right-hand digit takes you back to the main screen.

7.1.1.2 Main screen

The main screen shows factory default operating values.

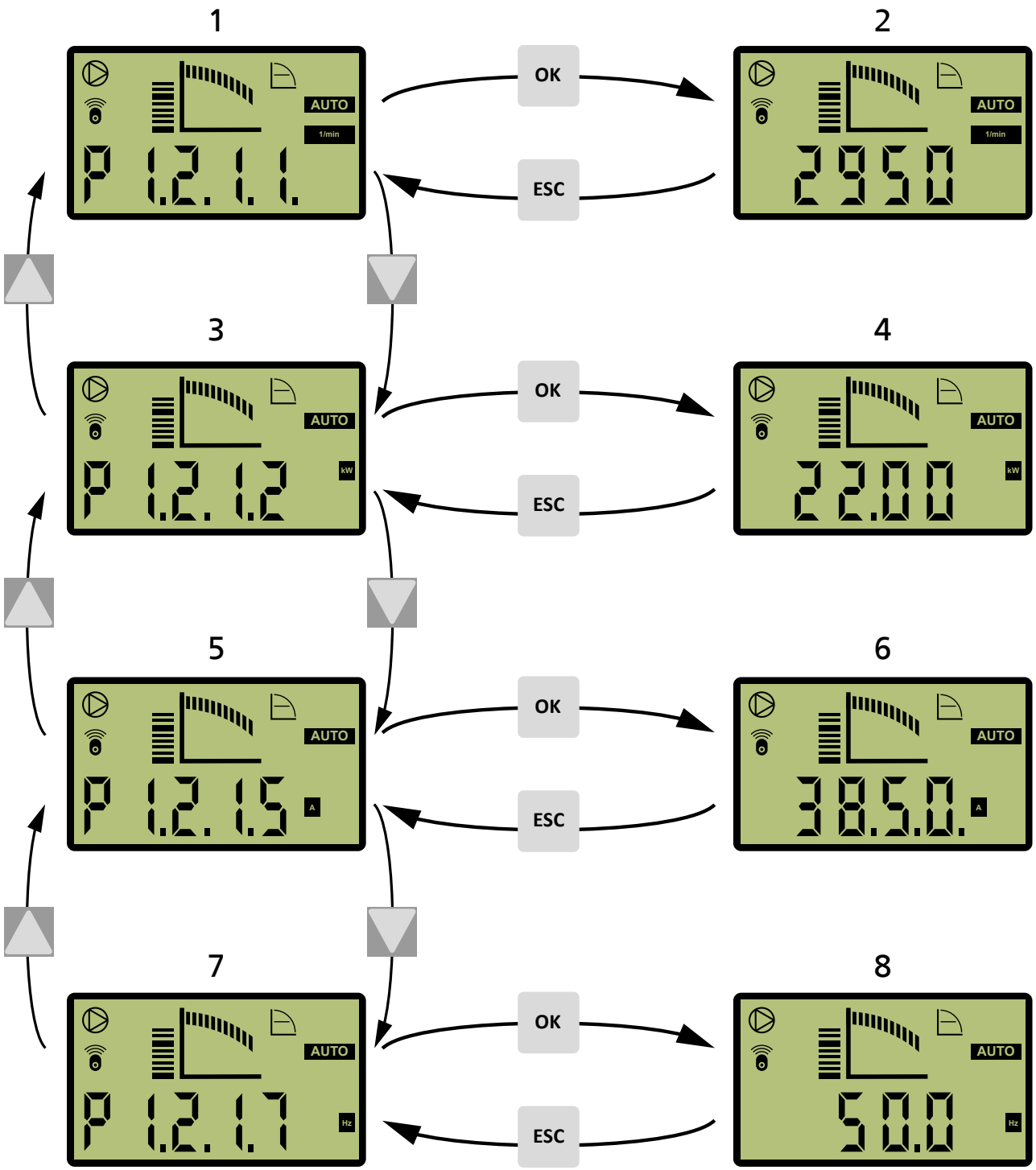

Fig. 9: Selecting and displaying operating values on the main screen

1	Parameter number for speed (1-2-1-1)
2	Current speed [rpm]
3	Parameter number for motor input power (1-2-1-2)
4	Current power input of motor in kW
5	Parameter number for motor current (1-2-1-5)
6	Current motor current in A

7	Parameter number for output frequency (1-2-1-7)
8	Current output frequency in Hz

If a message (alert, warning or information) is currently active, it will be displayed on the main screen.

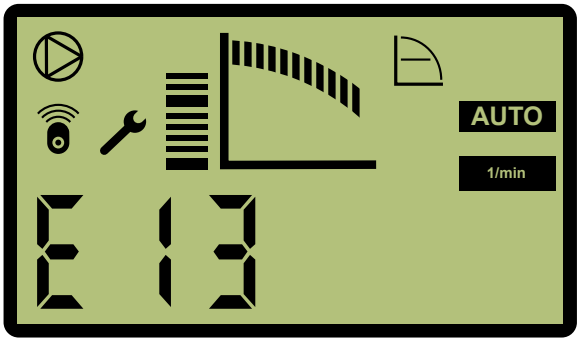

Fig. 10: Message display

A message is identified by the letter E (Error) and a unique number (see list of all messages in the Annex). The traffic light function shows whether the message is an alert (red LED), a warning (amber LED) or just information (green LED).

Messages are acknowledged by pressing OK. Acknowledged and gone messages are listed in the message history in Menu 2 – Diagnosis.

NOTE

If the motor standstill heater has been switched on, the display alternates between the measured value and the letter H.

7.1.1.3 Settings menu

NOTE

The standard control panel is designed to be used for simple settings only (e.g. setting the setpoint). We recommend using the KSB ServiceTool for more extensive configuration tasks.

Opening the Settings menu: Press and hold the ESC key and press OK.

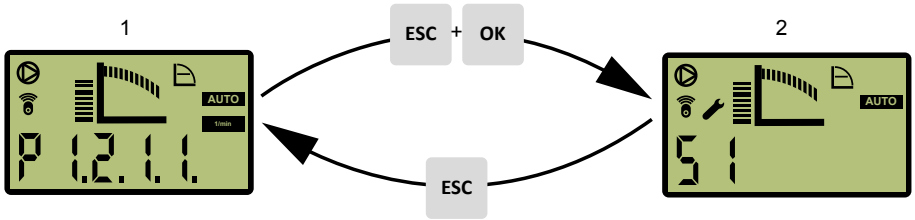

Fig. 11: Switch to the settings menu

1	Main screen	2	Settings menu

The wrench icon indicates that the settings menu is called up and a value can be edited.

The parameter numbers identify the navigation path, which helps you find a particular parameter quickly and easily. The first digit of the parameter number indicates the first menu level, which is called up directly via the four menu keys.

7.1.1.3.1 Menu: Operation

The Operation section contains all information required for operating the machine and the process. This includes:

- Login to device with password
- Operating and measured values for motor, frequency inverter, pump and system
- Setpoints and control values
- Energy meter and operating hours

7.1.1.3.1.1 Access levels

Three access levels have been defined to prevent unintentional or unauthorised access to frequency inverter parameters:

Table 16: Access levels

Access level	Description
Standard (No Login)	Access without password entry.
Customer	Access level for the expert user with access to all parameters required for commissioning
Customer service	Access level for service personnel.

If a parameter's access level is not explicitly specified, the parameter is always assigned the *Customer* access level.

Table 17: Access level parameters

Parameter	Description	Possible settings	Factory setting
1-1-1	*Customer Login* Log in as customer	0000...9999	0000

Customer service parameters can only be accessed using the KSB ServiceTool and the appropriate dongle.

NOTE

If no keys are pressed for five minutes, the system will automatically return to the *Standard* access level.

The password can be changed after entering the factory default password.

Table 18: Parameter for changing the password (requires use of the KSB ServiceTool)

Parameter	Description	Possible settings	Factory setting
1-1-5	*Customer Access ID* Changing the customer access ID	0000...9999	-

7.1.1.3.2 Menu: Diagnosis

In the Diagnosis section, the user is provided with information about faults and warning messages that pertain to the pump set or process. The frequency inverter can be in fault (standstill) or warning (operational) status. The user can also find previous messages in the history.

Messages

All monitoring and protective functions trigger warnings or alerts. These are signalled via the amber or red LED of the LED traffic light function.

A corresponding message is output on the control panel display. If more than one message is output, the last one is displayed. Alerts have priority over warnings.

Pending messages

If a message has occurred and been acknowledged but has not gone, this message will be listed in the Pending Messages menu. All current messages can be displayed in the Diagnosis menu under Pending Messages (*2-1*). Active warnings and alerts can also be connected to the relay outputs.

Message history Only messages that have come, been acknowledged, and gone are listed in the message history. The message history can be viewed by selecting the Message History parameter *2-2*. The last 100 messages are listed here. You can use the arrow keys and the OK key to select an entry from the list.

Acknowledging and resetting messages

NOTE

Depending on the combination of settings, the frequency inverter could conceivably restart automatically after acknowledgement/reset or when the cause of the malfunction or fault has been eliminated.

Acknowledgement Messages can be acknowledged once the cause has been rectified. Messages can be acknowledged individually in the Diagnosis menu. A message can also be acknowledged via a digital input. Digital input 2 is defaulted for this purpose.

Overview of warnings and alerts

Messages can be acknowledged as follows:

Table 19: Acknowledgement types for messages

Property of message	Type of acknowledgement
Self-acknowledging	Message is automatically acknowledged if condition for message no longer applies.
Automatic acknowledgement (configurable)	Users can choose between automatic acknowledgement and manual acknowledgement.
Partially automatic acknowledgement	Alerts that are partially acknowledged automatically carry out automatic acknowledgement in increasingly large intervals after the alert condition no longer applies. If the alert occurs repeatedly within a specific time window, automatic acknowledgement is suspended. As soon as the alarm condition of a pending alert no longer exists, the time interval is started. When this interval expires, automatic acknowledgement takes place. If the alert occurs again within 30 seconds after the time interval has started, the interval is extended by one increment. Should this not be the case, the previous (shorter) time interval is reverted to and corresponding action is taken again in 30 seconds. The time intervals are 1 second, 5 seconds, 20 seconds, and endless (i.e. manual acknowledgement is required). When the 20-second interval is extended, automatic acknowledgement no longer takes place.
No automatic acknowledgement	Must be acknowledged manually.

Time stamp If a message is not acknowledged and its condition comes and goes several times in this time window, the first occurrence of the message is always used for the Message Come time stamp. The Message Condition Gone time stamp, however, always shows the last time the message condition was no longer active.

7.1.1.3.3 Menu: Settings

General settings can be made or the settings for the process optimised in the Settings section.

Locking operating keys

Table 20: Parameters for setting the control panel

Parameter	Description	Possible settings	Factory setting
3-1-2-2	Control Keys Require Login *The MAN, OFF, AUTO and FUNC keys are locked without a valid login (customer).*	▪ 0 = OFF ▪ 1 = ON	0 = OFF

Locking operating keys The operating keys of the control panel can be locked via the *3-1-2-2* parameter to prevent unauthorised operation or unauthorised acknowledgement of alerts.

7.1.1.3.4 Menu: Information

All direct information about the frequency inverter is provided in the Information section. Important details regarding the firmware version are listed here.

7.1.1.4 Service interface and LED traffic light function

Service interface

The service interface allows a PC/notebook to be connected via a special cable (USB – optical).

The following action can be taken:

- Configuring and parameterising the frequency inverter with the service software
- Software update
- Saving and documenting set parameters

LED traffic light function

The LED traffic light function provides information about the current operating status of the frequency inverter.

Table 21: LED description

LED	Description
Red	One or more than one alert is active
Amber	One or more than one warning is active
Green	Steady light: Trouble-free operation

7.2 Operating a pressure booster system with PumpDrive 2

7.2.1 Graphical control panel

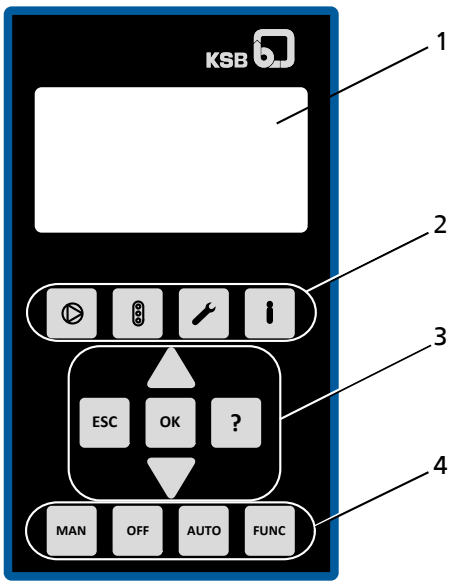

Fig. 12: Graphical control panel

Table 22: Description of graphical control panel

Position	Description	Function
1	Graphical display	Displays information on frequency inverter operation
2	Menu keys	Accessing the elements of the first menu level (Operation, Diagnosis, Settings and Information)
3	Navigation keys	Navigation and parameter setting
4	Operating keys	Toggling operating modes

7.2.1.1 Graphical display

The main screen breaks down into 6 areas.

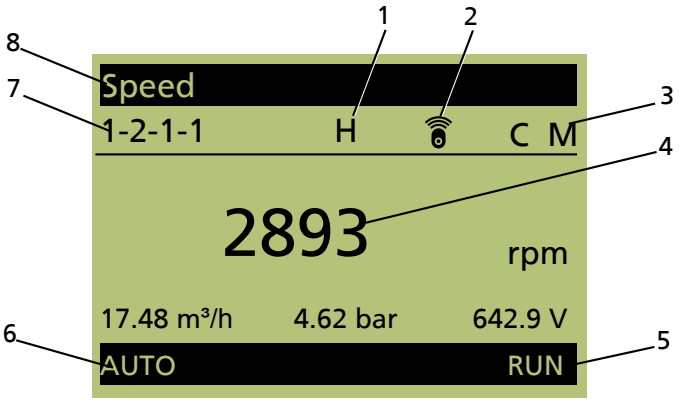

Fig. 13: Main screen (example)

1	Motor standstill heater is switched on
2	The wireless icon illuminates when the Bluetooth module is inserted. The wireless icon flashes when communication takes place.
3	Display of the master and login level
4	Display of up to four (4) operating values: One operating value is displayed in large format. Three (3) operating values are displayed in small format. The operating values scroll through cyclically.

5	Display of operating status
6	Display of the current operating mode
7	Parameter number of the operating value displayed in the centre
8	Name of the operating value displayed in the centre

Table 23: Assignment of keys

Key	Function
	Operation menu key
	Diagnosis menu key
	Settings menu key
	Information menu key
	Arrow keys: ▪ Move up/down in the menu options. ▪ Increase/decrease the value displayed when you are entering numerals. (When an arrow key is pressed and held down, the response repeats in ever shorter intervals.)
ESC	**Escape key:** ▪ Delete/reset entry (the entry is not saved). ▪ Move up one menu level.
OK	**OK key:** ▪ Confirm settings. ▪ Confirm menu selection. ▪ Move to the next digit when entering numerals. ▪ Message display: Acknowledge alert. ▪ Measured value display: Go to Favourites menu.
?	**Help key:** ▪ Displays a help text for each selected menu option.
MAN	MAN operating key: ▪ Starts the frequency inverter in manual operating mode.
OFF	OFF operating key: ▪ Stops the frequency inverter.
AUTO	AUTO operating key: ▪ Switches to automatic operating mode.
FUNC	FUNC operating key: ▪ Parameterisable function key

Manual mode via control panel

NOTE

After a power failure, the frequency inverter reverts to the OFF operating mode. Manual mode must be restarted.

Table 24: Assignment of keys for manual mode

Key	Function
MAN	MAN operating key: ▪ When switching the operating mode from AUTO to MAN, the current operating speed is used as control value (Manual) *1-3-4* and is displayed accordingly. The control point *3-6-2* must be set to Local. ▪ When switching the operating mode from OFF to MAN, the frequency inverter operates at minimum speed. The control point *3-6-2* must be set to Local. ▪ If the control value (Manual) *1-3-4* is defined via an analog input, the analog input speed is accepted.
▲ ▼	**Arrow keys:** ▪ Pressing the arrow keys changes and immediately accepts the control value (Manual) *1-3-4*. Making a change using the arrow key has a direct effect even when not confirmed with OK. The speed can only be changed between the set minimum speed and the maximum speed.
ESC OK	**ESC/OK key:** ▪ Press the OK or ESC key to go from digit to digit. Press the ESC key to go back. Changes are rejected. Pressing the OK key for the right-hand digit takes you back to the main screen.

7.2.1.2 Menu keys

The menu keys allow you to directly access the first menu level (Operation 1-x-x-x, Diagnosis 2-x-x-x, Settings 3-x-x-x, and Information 4-x-x-x).

The parameter numbers contain the navigation path, which helps you find a particular parameter quickly and easily. The first digit of the parameter number indicates the first menu level, which is called up directly via the four menu keys.

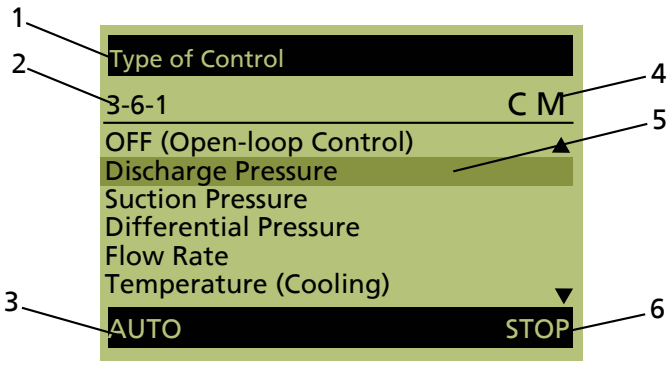

Fig. 14: Menu display

1	Name of current menu/parameter
2	Parameter number of parameter selected in selection list
3	Display of the current operating mode
4	Display of the master and login level
5	Parameter/submenu selection list
6	Display of operating status

7.2.1.2.1 Menu: Operation

The Operation section contains all information required for operating the machine and the process. This includes:

- Login to device with password
- Operating and measured values for motor, frequency inverter, pump and system
- Setpoints and control values
- Energy meter and operating hours

7.2.1.2.1.1 Access levels

Three access levels have been defined to prevent unintentional or unauthorised access to frequency inverter parameters:

Table 25: Access levels

Access level	Description
Standard (No Login)	Access without password entry.
Customer	Access level for the expert user with access to all parameters required for commissioning
Customer service	Access level for service personnel.

If a parameter's access level is not explicitly specified, the parameter is always assigned the customer access level.

Table 26: Access level parameters

Parameter	Description	Possible settings	Factory setting
1-1-1	Customer Login *Log in as customer*	0000...9999	0000
1-1-2	Service Login *Log in for access to special parameters for KSB Service*	0000...9999	-
1-1-4	Logout *Log out of all access levels*	Run	-

NOTE

If no keys are pressed for ten minutes, the system will automatically return to the standard access level.

The password can be changed after entering the factory default password.

Table 27: Parameters for changing passwords

Parameter	Description	Possible settings	Factory setting
1-1-5	Customer Access ID *Changing the customer access ID*	0000...9999	-
1-1-6	Service Access ID *Changing the service access ID*	0000...9999	-

7.2.1.2.1.2 Operating values for input and output signals

The status of the digital inputs/relay outputs is displayed via the Digital Inputs (*1-2-4-6*) and Digital Outputs (*1-2-4-7*) parameters.

Table 28: Example of status of digital inputs (1-2-4-6). 24 V is applied to digital input 1: System Start

	Optional IO card			Standard				
Digital input	DI8	DI7	DI6	DI5	DI4	DI3	DI2	DI1
Bit pattern on display	0	0	0	0	0	0	0	I

Table 29: Example of status of digital outputs (1-2-4-7). The following is reported via relay output 1: General fault message (configurable)

	Optional IO card								Standard	
Digital output	R8	R7	R6	R5	R4	R3	DO2	D01	R2	R1
Bit pattern on display	0	0	0	0	0	0	0	0	0	I

7.2.1.2.2 Menu: Diagnosis

In the Diagnosis section, the user is provided with information about faults and warning messages that pertain to the pump set or process. The frequency inverter can be in fault (standstill) or warning (operational) status. The user can also find previous messages in the history.

Messages

All monitoring and protective functions trigger warnings or alerts. These are signalled via the amber or red LED of the LED traffic light function.

A corresponding message is output on the control panel display. If more than one message is output, the last one is displayed. Alerts have priority over warnings.

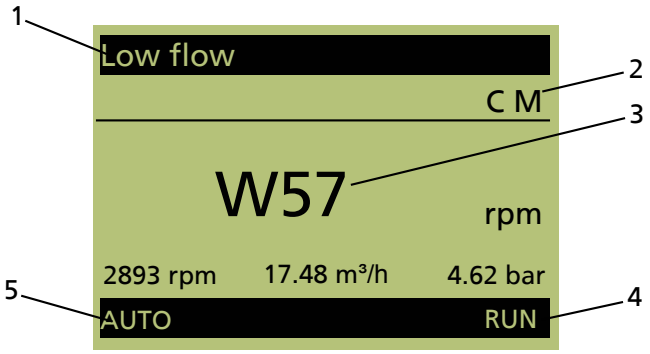

Fig. 15: Message display

1	Name of the message displayed in the centre
2	Display of the master and login level
3	Display of the message: The most recently received message is displayed in large format on the main screen. Three operating values are displayed in small format.
4	Display of operating status
5	Displays the current operating mode

Pending messages

If a message has occurred and been acknowledged but has not gone, this message will be listed in the Pending Messages menu. All current messages can be displayed in the Diagnosis menu under Pending Messages (*2-1*). Active warnings and alerts can also be connected to the relay outputs.

Message history

Only messages that have come, been acknowledged, and gone are listed in the message history. The message history can be viewed by selecting the Message History parameter *2-2*. The last 100 messages are listed here. You can use the arrow keys and the OK key to select an entry from the list.

Acknowledging and resetting messages

NOTE

Depending on the combination of settings, the frequency inverter could conceivably restart automatically after acknowledgement/reset or when the cause of the malfunction or fault has been eliminated.

Acknowledgement Messages can be acknowledged once the cause has been rectified. Messages can be acknowledged individually in the Diagnosis menu. A message can also be acknowledged via a digital input. Digital input 2 is defaulted for this purpose.

Overview of warnings and alerts

Messages can be acknowledged as follows:

Table 30: Acknowledgement types for messages

Property of message	Type of acknowledgement
Self-acknowledging	Message is automatically acknowledged if condition for message no longer applies.
Automatic acknowledgement (configurable)	Users can choose between automatic acknowledgement and manual acknowledgement.
Partially automatic acknowledgement	Alerts that are partially acknowledged automatically carry out automatic acknowledgement in increasingly large intervals after the alert condition no longer applies. If the alert occurs repeatedly within a specific time window, automatic acknowledgement is suspended. As soon as the alarm condition of a pending alert no longer exists, the time interval is started. When this interval expires, automatic acknowledgement takes place. If the alert occurs again within 30 seconds after the time interval has started, the interval is extended by one increment. Should this not be the case, the previous (shorter) time interval is reverted to and corresponding action is taken again in 30 seconds. The time intervals are 1 second, 5 seconds, 20 seconds, and endless (i.e. manual acknowledgement is required). When the 20-second interval is extended, automatic acknowledgement no longer takes place.
No automatic acknowledgement	Must be acknowledged manually.

Time stamp If a message is not acknowledged and its condition comes and goes several times in this time window, the first occurrence of the message is always used for the Message Come time stamp. The Message Condition Gone time stamp, however, always shows the last time the message condition was no longer active.

7.2.1.2.3 Menu: Settings

General settings can be made or the settings for the process optimised in the Settings section.

7.2.1.2.3.1 Setting the display language

The display ships from the factory with support for 4 languages (language package). A language package can be changed using the KSB ServiceTool:

Table 31: Parameters for display language

Parameter	Description	Possible settings	Factory setting
3-1-1	Language *Configurable display language*	Depending on the language package: ▪ English, German, French, Italian ▪ English, French, Dutch, Danish ▪ English, Spanish, Portuguese, Turkish ▪ English, Norwegian, Swedish, Finnish ▪ English, Estonian, Latvian, Lithuanian ▪ English, Polish, Hungarian, Czech ▪ English, Slovenian, Slovakian, Croatian ▪ English, Russian, Romanian, Serbian	English, German, French, Italian

7.2.1.2.3.2 Setting the control panel

Table 32: Parameters for setting the control panel

Parameter	Description	Possible settings	Factory setting
3-1-2-1	Operating Values on Main Screen *Display of current operating values on the main screen*	Main screen selection list	-
3-1-2-2	Control Keys Require Login *Direct access to the MAN, OFF, AUTO and FUNC operating keys can be disabled via this parameter.*	▪ OFF ▪ ON	OFF
3-1-2-3	Function Key Assignment *Assigning a freely selectable function to the FUNC key*	▪ No Function ▪ System Start / Stop ▪ Setpoint Changeover (Controller) ▪ Control Value Changeover (Actuator) ▪ Immediate Pump Changeover ▪ Immediate Functional Check Run ▪ Language ▪ Remote / Local Control Point	Language
3-1-2-4	Display Contrast *Configurable contrast for the display*	0...100	50
3-1-2-5	Display Backlight *Configuring the display backlight*	▪ OFF ▪ ON ▪ Automatic	Automatic
3-1-2-6	Display Backlight Duration *Duration of display backlight on period in automatic mode*	0 - 600	30

Operating Values on Main Screen

Up to 4 operating values are simultaneously displayed on the main screen. An operating value is displayed in large format with the associated parameter name, parameter number and unit. Three (3) operating values are displayed in smaller format with the associated unit. The arrow keys can be used to cycle through the operating values. Each operating value passes through all display areas. Up to 10 operating values can be selected from the predefined list for the display. The sequence of the selection list determines the sequence of the operating values on the main screen. If more than 4 parameters are selected, the hidden parameters are also cycled through in the background.

Selecting operating values for the main screen

1. Open parameter *3-1-2-1* in the Settings menu.
2. Using the arrow keys, select the operating value to be displayed from the list.
3. Press OK key.
4. Select additional, required operating values from the list and confirm by pressing the OK key.

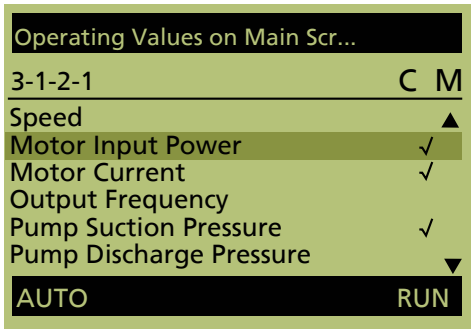

Fig. 16: Selecting multiple parameters from the selection list

Locking operating keys The operating keys of the control panel can be locked via the *3-1-2-2* parameter to prevent unauthorised operation or unauthorised acknowledgement of alerts.

Function key assignment The FUNC operating key can be preassigned a function from a selection list.

	NOTE
	When the FUNC operating key is used in the System Start / Stop role, the system must be restarted via the **FUNC** operating key every time the voltage is reset.

Favourites menu Press the OK key on the main screen to call up the favourites menu, where you can select various parameters and quickly adapt their configuration settings.

7.2.1.2.4 Menu: Information

All direct information about the frequency inverter is provided in the Information section. Important details regarding the firmware version are listed here.

7.2.1.3 Service interface and LED traffic light function

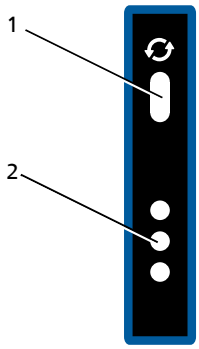

Fig. 17: Service interface and traffic light LEDs

Item	Description	Function
1	Service interface	Optical interface
2	LED traffic light function	The traffic light function provides information about the system's operating status.

Service interface The service interface allows a PC/notebook to be connected via a special cable (USB – optical).

The following action can be taken:

- Configuring and parameterising the frequency inverter with the service software
- Software update
- Saving and documenting set parameters

LED traffic light function The LED traffic light function provides information about the current operating status of the frequency inverter.

Table 33: LED description

LED	Description
Red	One or more than one alert is active
Amber	One or more than one warning is active
Green	Steady light: Trouble-free operation

7.3 Adjusting the settings

7.3.1 Setting the setpoint

The pressure booster system is factory-set to the setpoint indicated on the rating plate.
If the setpoint needs to be adjusted to site conditions, parameter 1-3-2 has to be changed as required.
First, enter the customer password.
Then change the setpoint.

7.3.2 Changing the controller settings

The PI controller of the frequency inverter is optimised when leaving the factory, therefore no changes are required.
Should a process-related adjustment of the PI controller be necessary, check/change the factory settings in accordance with the PumpDrive operating manual.

7.4 Operating modes

7.4.1 Manual mode

Manual mode is reserved for emergencies. Continuous manual operation would lead to waste of energy and water and cause the fluid handled and/or the pump set to overheat. The pump sets can be switched to manual mode depending on the pressure booster system design.

- **Standard design:** By making the appropriate settings via the frequency inverter display, one of the pump sets is operated directly on the power supply network for 10 seconds, independently of the control unit. After these 10 seconds the pump set is stopped automatically.
- **Design with supplementary equipment:** By selecting the appropriate setting via the manual-0-automatic selector switch, available as supplementary equipment, every pump set is operated directly on the power supply network, independently of the control unit.

7.4.2 Energy-saving mode

CAUTION

Hunting (excessive starting/stopping) of pressure booster system

Damage to the pumps!

▹ Only activate the energy-saving mode if a sufficiently sized accumulator is fitted on the discharge side.

NOTE

No recommendation can be given for the parameters of the energy-saving mode. The values depend on the system installed and can only be defined at the operational pressure booster system installed on site.

In conjunction with a very large discharge-side accumulator, the energy-saving mode ensures that the pressure booster system runs at an energy-efficient operating point when required to supply very small amounts of water. If a very small amount of water is consumed the pressure booster system fills the downstream accumulator and stops. Any small water volumes required can then be supplied from the accumulator.

✓ The original operating manual of the frequency inverter is on hand.

✓ The accumulator has been filled.

1. Slowly close the discharge-side shut-off valve until only a single pump set is left running and delivering a small amount of water.
2. Set the energy-saving mode via the frequency inverter in accordance with the supplied operating manual.

8 Servicing/Maintenance

8.1 General information/safety regulations

	⚠ DANGER **Unintentional start-up of pressure booster system** Danger to life! ▹ De-energise the pressure booster system for any repair work or servicing work. ▹ Ensure that the pressure booster system cannot be re-energised unintentionally.

	⚠ WARNING **Improper lifting/moving of heavy assemblies or components** Personal injury and damage to property! ▹ Use suitable transport devices, lifting equipment and lifting tackle to move heavy assemblies or components.

	⚠ WARNING **Unqualified personnel performing work on the pressure booster system** Risk of personal injury! ▹ Always have repair and maintenance work performed by specially trained, qualified personnel.

	CAUTION **Incorrectly serviced pressure booster system** Function of pressure booster system not guaranteed! ▹ Regularly service the pressure booster system. ▹ Prepare a maintenance schedule for the pressure booster system, with special emphasis on lubricants, shaft seals and pump couplings.

The operator ensures that maintenance, inspection and installation are performed by authorised, qualified specialist personnel who are thoroughly familiar with the manual.

- Observe the safety instructions and information.
- For any work on the pump (set) observe the operating manual of the pump (set).
- In the event of damage you can always contact KSB- KSB Service .
- A regular maintenance schedule will help avoid expensive repairs and contribute to trouble-free, reliable operation with a minimum of maintenance expenditure and work.
- Never use force when dismantling and reassembling the equipment.

8.1.1 Inspection contract

For all inspection work and servicing work to be carried out at regular intervals we recommend taking out the KSB inspection contract. Contact your service partner for details.

8.2 Servicing/Inspection

8.2.1 Supervision of operation

	CAUTION **Increased wear due to dry running** Damage to the pump set! ▹ Never operate the pump set without liquid fill. ▹ Never close the shut-off element in the suction line and/or supply line during pump operation.

	CAUTION **Impermissibly high temperature of fluid handled** Damage to the pump! ▹ Prolonged operation against a closed shut-off element is not permitted (heating up of the fluid). ▹ Observe the temperature limits in the data sheet and in the section on operating limits.

While the pump is in operation, observe and check the following:

- If activated, check the functional check run.
- Measure the actual start-up pressure and stop pressure of the pump sets with a pressure gauge. Compare the values with the specifications on the name plate.
- Compare the pre-charge pressure of the accumulator with the recommended data. (⇨ Section 8.3, Page 51)
- Check the rolling element bearings for running noises.
  Vibrations, noise and an increase in current input occurring during unchanged operating conditions indicate wear.
- Monitor the functions of auxiliary connections, if any.

8.2.2 Maintenance schedule

Table 34: Overview of maintenance work

Maintenance interval	Servicing/maintenance work
At least once a year	Check the pump sets for smooth running and the mechanical seal for integrity.
	Check the shut-off elements, drain valves and check valves for proper functioning and tightness.
	If fitted, clean the strainer in the pressure reducer.
	If fitted, check the expansion joints for any wear.
	Verify the pre-charge pressure. Check the accumulator for integrity. (⇨ Section 8.3, Page 51)
	Check the automatic switching functionality.
	Check the cut-in levels and cut-out levels.
	Check the inflow, inlet pressure, dry running protection, flow monitoring and pressure reducer.

8.3 Setting the pre-charge pressure

	⚠ WARNING **Wrong gas** Danger of poisoning! ▹ Use only nitrogen to charge the accumulator.

	CAUTION **Pre-charge pressure too high** Damage to the accumulator! ▹ Observe the manufacturer's product literature (see name plate or operating manual of the accumulator).

The accumulator's pre-charge pressure (p) must be lower than the set start-up pressure (p_E) of the pressure booster system.

The best storage volumes are achieved with the following settings (mean value):

- Value 0.9 at start-up pressure > 3 bar
- Value 0.8 at start-up pressure < 3 bar

Example 1 p_E = 5 bar

5 bar × 0.9 = 4.5 bar

With a start-up pressure of 5 bar the pre-charge pressure of the accumulator must be 4.5 bar.

Example 2 p_E = 2 bar

2 bar × 0.8 = 1.6 bar

With a start-up pressure of 2 bar the pre-charge pressure of the accumulator must be 1.6 bar.

Checking the pre-charge pressure

1. Close the shut-off elements fitted underneath the membrane-type accumulator.
2. Drain the membrane-type accumulator via the drain valve.
3. Remove and store the protective cap of the membrane-type accumulator valve.
4. Check the pre-charge pressure using suitable equipment (e.g. tyre pressure gauge).
5. Fit the protective cap of the membrane-type accumulator valve.

Filling the membrane-type accumulator

1. Remove and store the protective cap of the membrane-type accumulator valve.
2. Add nitrogen through the valve.
3. Fit the protective cap of the membrane-type accumulator valve.

8.4 Resetting dry running protection

If no flow is detected on the suction side and the pressure on the pressure side drops below the set value, the flow monitor stops the pressure booster system (lack of water). Depending on the system design, dry running protection must be reset manually.

Pressure switch and pressure transmitter

If dry running protection devices are available in the form of pressure switches or pressure transmitters, the system is reset automatically (self-reset).

Flow monitor

To reset the dry running protection, set at least one pump set to manual mode.

Resetting via manual-0-automatic selector switch

1. Set the manual-0-automatic selector switch to manual for approx. 10 seconds.

Resetting via frequency inverter

✓ The original operating manual of the frequency inverter is on hand.

1. Set the pump set to manual mode for approx. 10 seconds via the frequency inverter's control unit. See the original operating manual of the frequency inverter.

9 Trouble-shooting

9.1 Trouble-shooting: pressure booster system

⚠ WARNING

Improper work to remedy faults

Risk of injury!

- ▹ For any work performed to remedy faults, observe the relevant information given in this instruction manual and/or in the product literature provided by the accessories manufacturer.

NOTE

Before performing any work on the pump's internal parts during the warranty period please always consult the manufacturer. Our after-sales service will be at your disposal. Non-compliance will lead to forfeiture of any and all rights to claims for damages.

If problems occur that are not described in the following table, consultation with the KSB service is required.

A Pressure booster system cuts out.
B Pressure fluctuations on the discharge side.
C Pressure booster system does not start up.
D Pump running but not delivering water
E Insufficient delivery of pressure booster system.
F Discharge-side pressure too low.
G Discharge-side pressure too high.
H Leakage at mechanical seal.
I Motor/pump overheated.
J Motor protection switch triggered.
K Pressure booster system does not stop.
L Excessive starting/stopping of pressure booster system.
M Motor overheated.

Table 35: Trouble-shooting

A	B	C	D	E	F	G	H	I	J	K	L	M	Possible cause	Remedy[2)]
✗	-	✗	-	-	-	-	-	-	-	-	-	-	Dry-running protection device not connected.	Connect or bridge.
✗	-	✗	-	-	-	-	-	-	-	-	-	-	Mains supply interrupted	Check and remedy defect if possible.
✗	-	✗	-	-	-	-	-	-	✗	-	-	✗	Phase failure	Check individual phases and fuse.
✗	-	✗	-	-	-	-	-	-	✗	-	-	✗	Motor protection switch triggered or set incorrectly / pump seized.	Compare setting with the motor's rating plate data and set accordingly. Press reset/fault acknowledgement key.
✗	-	✗	-	-	-	-	-	-	-	-	-	-	Control current fuse tripped.	Check control current fuse. Replace if required.
-	-	✗	-	-	-	-	-	-	-	-	-	-	Lack of water	Check inlet pressure.
-	-	✗	-	-	-	✗	-	-	-	-	-	-	Inlet pressure higher than specified in the purchase order	Fit pressure reducer; contact the manufacturer.

2) Release the pump set pressure and disconnect the pump set from the power supply before performing work on pressure-retaining parts.

A	B	C	D	E	F	G	H	I	J	K	L	M	Possible cause	Remedy[2)]
-	-	-	-	✗	✗	✗	-	✗	✗	✗	-	-	Incorrect power supply; incorrect speed.	Check the mains power supply.
-	✗	✗	✗	✗	✗	-	-	✗	-	-	✗	✗	Shut-off valves fully or partially closed	Check, open as necessary.
-	-	-	✗	✗	-	-	-	✗	-	✗	-	✗	Pump / piping not completely vented and/or primed.	Vent and prime.
-	-	-	✗	✗	✗	-	-	✗	✗	✗	-	✗	Check valve in bypass line defective	Replace.
-	-	-	-	-	✗	-	-	-	-	-	-	-	Insufficient inflow	Restore required inflow; connect accumulator.
-	-	-	-	-	✗	-	-	✗	✗	-	-	✗	Pump runs sluggishly.	Have pump repaired by a specialist.
-	-	-	-	-	-	-	✗	-	-	-	-	-	Defective mechanical seal	Replace.
-	-	✗	-	-	-	-	-	✗	-	-	-	✗	Incorrect pre-charge pressure of inlet tank	Set correct pre-charge pressure; replace membrane.
✗	-	✗	✗	-	-	-	-	-	✗	✗	-	-	Inlet-side pressure switch defective or set incorrectly.	Check the value set at the pressure switch; adjust if required.
-	-	-	-	-	-	-	-	✗	-	✗	✗	✗	Defective time relay or time set incorrectly.	Check time relay. Correct minimum operating time if required.
-	-	-	-	-	-	-	-	-	-	-	✗	-	System leaking.	Restore system integrity.
-	-	✗	-	-	✗	✗	-	-	-	✗	✗	-	Discharge-side pressure switch defective or set incorrectly.	Check the value set at the pressure switch; adjust if required.
✗	-	-	-	-	-	-	-	-	✗	-	-	-	Intermittent voltage fluctuations	Press reset/fault acknowledgement key.
-	-	-	✗	-	-	-	-	✗	✗	-	-	✗	Defective check valve	Check and replace if necessary.
-	-	-	✗	✗	✗	-	-	✗	-	✗	-	-	Pump running in the wrong direction of rotation.	Interchange two of the phases of the power supply.
-	-	-	✗	-	✗	-	-	-	-	✗	✗	-	Inlet pressure lower than specified in the purchase order	Connect inlet tank, contact the manufacturer.
-	✗	-	-	-	✗	-	-	-	✗	✗	-	-	Water extraction higher than specified in the purchase order	Contact the manufacturer.

9.2 Trouble-shooting: frequency inverter

⚠ WARNING

Improper work to remedy faults

Risk of injury!

- For any work performed to remedy faults, observe the relevant information given in this instruction manual and/or in the product literature provided by the accessories manufacturer.

If problems occur that are not described in the following table, consultation with the KSB service is required.

A Mains fuse rating too small for the nominal mains current.

B Motor does not start.

C Motor running unevenly.

D Max. speed not reached.

E Motor running at maximum speed only.

F Motor running at minimum speed only.

G No/faulty 24 V supply.

H Wrong direction of rotation of the motor.

I Fault message/protective tripping.

Table 36: Trouble-shooting

A	B	C	D	E	F	G	H	I	Possible cause	Remedy
-	✗	-	-	-	-	✗	-	-	No voltage	Check the mains voltage; check the mains fuses.
-	✗	-	-	-	-	-	-	-	No enable	Check enable via DIGIN-EN and system start.
✗	-	-	-	-	-	-	-	-	Mains fuse rating too small for frequency inverter input current	Check configuration/selection of mains fuse.
-	-	-	✗	-	-	-	-	-	No setpoint signal or setpoint set too low / drive overloaded and in i^2t control mode	Check setpoint signal and operating point.
-	-	-	-	✗	-	-	-	-	Process-related persistent control deviation (actual value smaller than setpoint) or no actual value (e.g. due to broken wire)	Check setpoint signal/actual value signal. Check operating point. Check controller setting.
-	✗	- -	-	-	-	-	-	✗	Permissible voltage range undershot/exceeded	Check mains voltage; supply frequency inverter with required voltage.
-	-	-	-	-	-	-	✗	-	Wrong direction of rotation setting	Change the direction of rotation.
-	-	✗	✗	-	-	-	-	✗	Frequency inverter overloaded	Reduce the power input by lowering the speed; check the motor/pump for blockages.
-	✗	-	-	-	-	-	-	✗	Short circuit in control cable/ pump blocked	Check/replace control cable connections. Remove the blockage manually.

A	B	C	D	E	F	G	H	I	Possible cause	Remedy
-	-	✗	✗	-	-	-	-	✗	Temperature of power electronics or stator winding too high	Reduce the ambient temperature. ▪ Improve ventilation. ▪ Clean cooling fins. ▪ Ensure that the intake opening for the fans is not blocked. ▪ Ensure that the fans are working properly. ▪ Reduce the power input by changing the operating point (system-specific). ▪ Check the permissible load and, if necessary, use external cooling.
-	-	-	-	-	-	✗	-	✗	24 V supply overloaded	Disconnect frequency inverter from the power supply and eliminate the cause of the overload.
-	-	-	-	-	-	-	-	✗	Dry running	Check the hydraulic system and rectify the fault on the frequency inverter.
-	-	-	✗	-	✗	-	-	✗	Sensor signal error (e.g. broken wire)	Check sensor and sensor cable.
-	✗	✗	-	-	-	-	-	✗	Phase failure (drive)	Check motor connection and stator winding.

10 Related Documents

10.1 General assembly drawings with list of components

10.1.1 Hyamat SVP Eco with Movitec 2, 4, 6, 10, 15

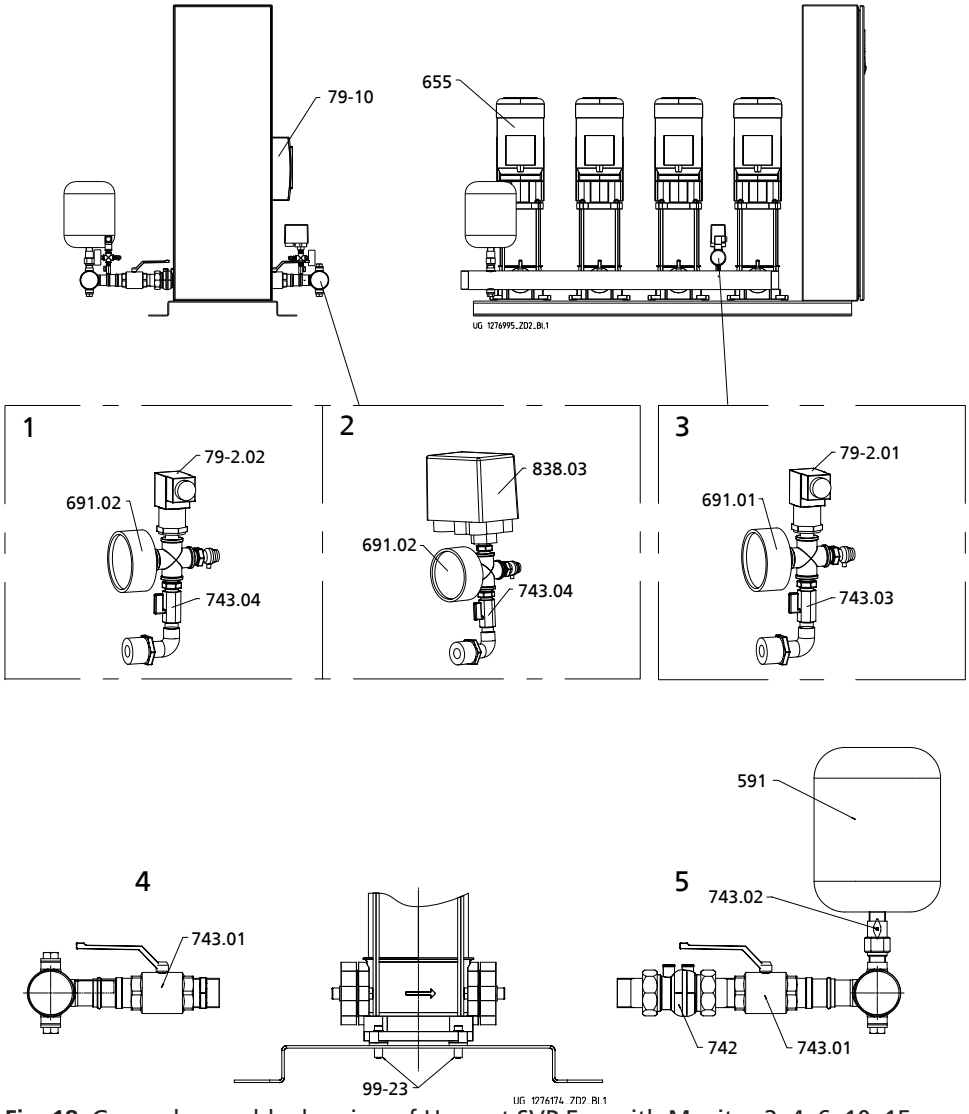

Fig. 18: General assembly drawing of Hyamat SVP Eco with Movitec 2, 4, 6, 10, 15

1	Option: pressure transmitter
2	Option: pressure switch
3	Standard version: pressure transmitter
4	Pump connection, suction side
5	Pump connection, discharge side

Table 37: List of components

Part No.	Description	Ident. No.
591	Tank	01 079 764
655	Pumps, see Spare Parts Programme	On request
680	Acoustic cladding see accessories	On request
691.01	Pressure gauge, indication 0 - 16 bar	00 401 413
691.02	Pressure gauge, indication 0 - 10 bar	00 401 414
742	Lift check valve 1 (Movitec 2, 4)	01 149 253
742	Lift check valve 1 $^1/_4$ (Movitec 6)	01 149 254
742	Lift check valve 1 $^1/_2$ (Movitec 10)	01 149 255
742	Lift check valve 2 (Movitec 15)	01 149 256
743.01	Ball valve G 1 (Movitec 2, 4)	01 057 427
743.01	Ball valve G 1 $^1/_4$ (Movitec 6)	01 057 428
743.01	Ball valve G 1 $^1/_2$ (Movitec 10)	01 057 429
743.01	Ball valve G 2 (Movitec 15)	01 057 430
743.02	Ball valve for accumulator	01 079 765
743.03	Ball valve G $^1/_4$	00 410 125
743.04	Ball valve G $^1/_4$	00 410 125
79-2.01	Transmitter 0 - 16 bar	01 133 639
79-2.02	Transmitter 0 - 10 bar	01 133 638
79-2.02	Transmitter 0 - 1 bar	01 533 184
838.03	Pressure switch 0 - 11 bar	01 034 231
903	Set of screw plugs	On request
99-23	Installation set per pump	18 040 627

10.1.2 Hyamat SVP Eco with Movitec 25, 40, 60, 90

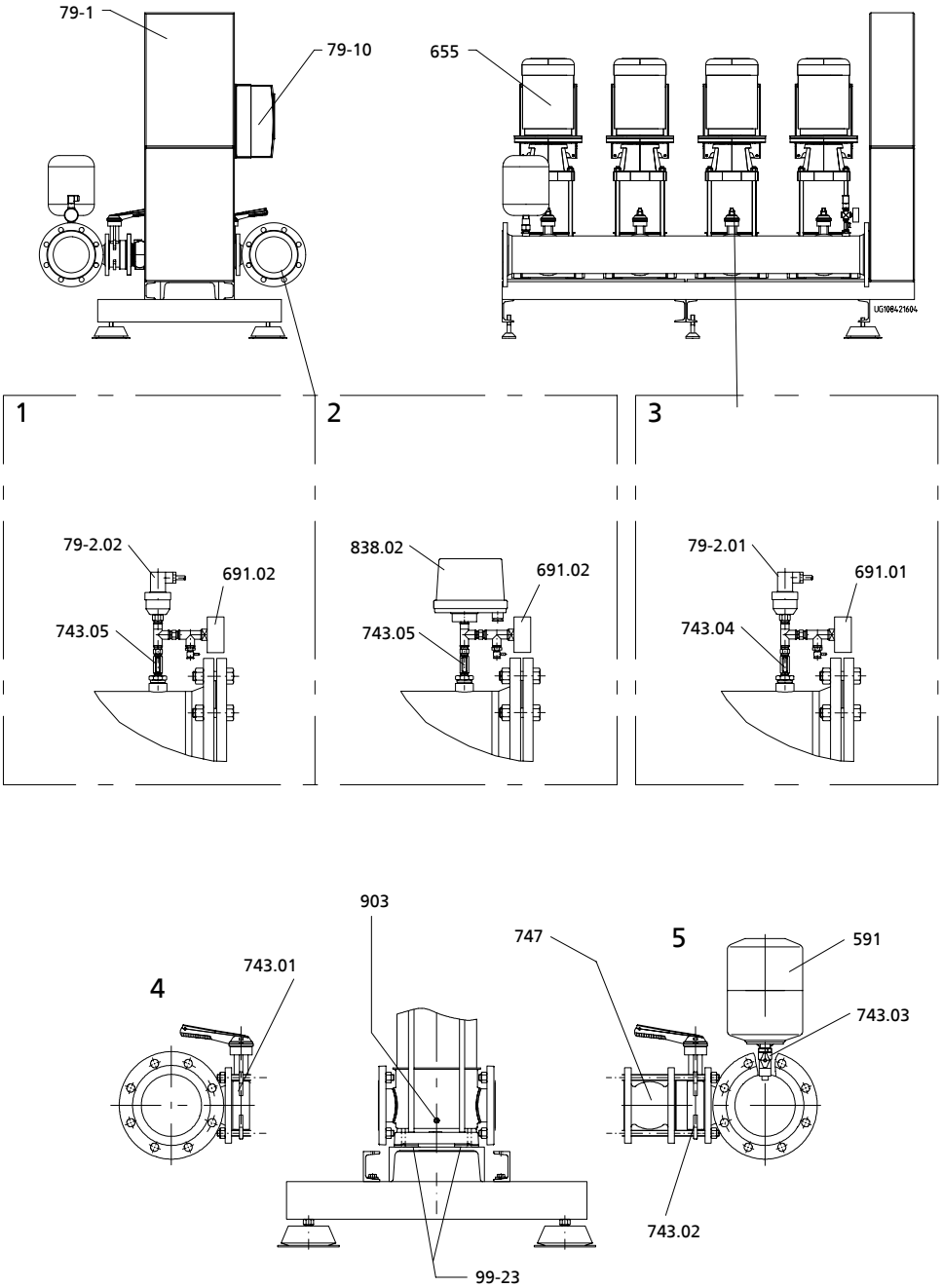

Fig. 19: General assembly drawing of Hyamat SVP Eco with Movitec 25, 40, 60, 90

1	Option: pressure transmitter
2	Option: pressure switch
3	Standard version: pressure transmitter
4	Pump connection, suction side
5	Pump connection, discharge side

Table 38: List of components

Part No.	Description	Ident. No.
591	Tank	01 079 764
655	Pumps, see Spare Parts Programme	On request
680	Acoustic cladding see accessories	On request
691.01	Pressure gauge, indication 0 - 16 bar	00 401 413
691.02	Pressure gauge, indication 0 - 10 bar	00 401 414
743.01	Butterfly valve DN 65 (Movitec 25)	42 087 766
743.01	Butterfly valve DN 80 (Movitec 40)	42 087 767
743.01	Butterfly valve DN 100 (Movitec 60, 90)	42 087 768
743.02	Butterfly valve DN 65 (Movitec 25)	42 087 766
743.02	Butterfly valve DN 80 (Movitec 40)	42 087 767
743.02	Butterfly valve DN 100 (Movitec 60, 90)	42 087 768
743.03	Ball valve for accumulator	01 079 765
743.04	Ball valve G $^1/_4$	00 410 125
743.05	Ball valve G $^1/_4$	00 410 125
747	Swing check valve DN 65 (Movitec 25)	40 984 470
747	Swing check valve DN 80 (Movitec 40)	40 984 471
747	Swing check valve DN 100 (Movitec 60, 90)	40 984 472
79-2.01	Transmitter 0 - 16 bar	01 133 639
79.2.02	Transmitter 0 - 10 bar	01 133 638
79-2.02	Transmitter 0 - 1 bar	01 533 184
838.02	Pressure switch 0 - 11 bar	01 034 231
903	Set of screw plugs	On request
99-23	Installation set per pump	18 040 654

10.2 Flow diagram

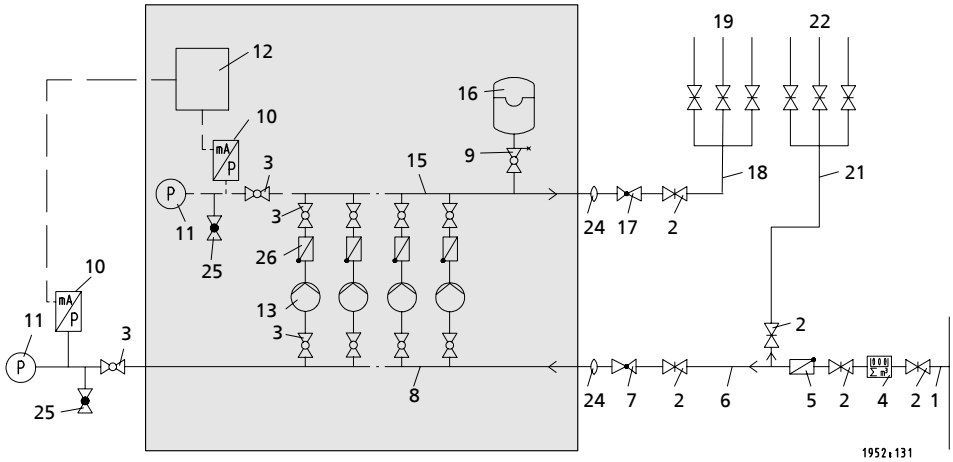

Fig. 20: Flow diagram for direct connection (grey box: KSB's scope of supply)

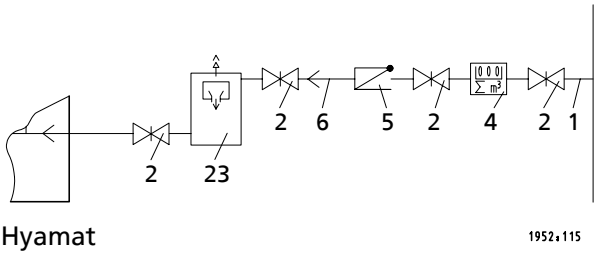

Hyamat

Fig. 21: Flow diagram for indirect connection

Number	Description
1	Mains water supply
2	Shut-off element
3	Ball valve
4	Water meter
5	Check valve
6	Distribution line, inlet side
7	Pressure reducer, inlet side
8	Inlet line
9	Shut-off elements
10	Pressure transmitter
11	Pressure gauge
12	Control unit
13	Pump with drain and vent valve
15	Discharge line
16	Accumulator, discharge side
17	Pressure reducer, discharge side
18	Distribution line downstream of pressure booster system
19	Consumer lines downstream of pressure booster system
21	Consumer lines upstream of pressure booster system
22	Distribution line upstream of pressure booster system
23	Inlet tank with float valve and level monitor
24	Expansion joint
25	Drain valve
26	Swing check valve

11 EU Declaration of Conformity

Manufacturer: **KSB SE & Co. KGaA**
Johann-Klein-Straße 9
67227 Frankenthal (Germany)

The manufacturer herewith declares that **the product**:

Hyamat K, Hyamat V, Hyamat SVP, Hyamat SVP Eco

KSB order number: .....

- is in conformity with the provisions of the following Directives as amended from time to time:
  - Pump set: EC Machinery Directive 2006/42/EC
  - Pump set: Electromagnetic Compatibility Directive 2014/30/EU

The manufacturer also declares that

- the following harmonised international standards have been applied:
  - ISO 12100
  - EN 809
  - EN 60204-1
- Applied national technical standards and specifications, in particular:
  - DIN 1988-500

Person authorised to compile the technical file:

Name
Function
Address (company)
Address (street, No.)
Address (post or ZIP code, city) (country)

The EU Declaration of Conformity was issued in/on:

Place, date

.....[3].....

Name

Function

Company
Address

3) A signed, legally binding EU Declaration of Conformity is supplied with the product.

12 Certificate of Decontamination

Type: .....

Order number/
Order item number[4]: .....

Delivery date: .....

Applications: .....

Fluid handled[4]: .....

Please tick where applicable[4]:

☐ Corrosive

☐ Oxidising

☐ Flammable

☐ Explosive

☐ Hazardous to health

☐ Seriously hazardous to health

☐ Toxic

☐ Radioactive

☐ Bio-hazardous

☐ Safe

Reason for return[4]: .....

Comments: .....

.....

The product/accessories have been carefully drained, cleaned and decontaminated inside and outside prior to dispatch/ placing at your disposal.

We herewith declare that this product is free from hazardous chemicals, biological and radioactive substances.

For mag-drive pumps, the inner rotor unit (impeller, casing cover, bearing ring carrier, plain bearing, inner rotor) has been removed from the pump and cleaned. In cases of containment shroud leakage, the outer rotor, bearing bracket lantern, leakage barrier and bearing bracket or intermediate piece have also been cleaned.

For canned motor pumps, the rotor and plain bearing have been removed from the pump for cleaning. In cases of leakage at the stator can, the stator space has been examined for fluid leakage; if fluid handled has penetrated the stator space, it has been removed.

☐ No special safety precautions are required for further handling.

☐ The following safety precautions are required for flushing fluids, fluid residues and disposal:

.....

.....

We confirm that the above data and information are correct and complete and that dispatch is effected in accordance with the relevant legal provisions.

.....	.....	.....
Place, date and signature	Address	Company stamp

4) Required fields

13 Commissioning Report

The pressure booster system specified below has been commissioned today by the undersigned, authorised KSB Service who created this report.

Pressure booster system details

Type series .....

Size .....

Serial number .....

Order No. .....

Purchaser/place of installation

Purchaser		**Place of installation**
Name	.....	.....
Address	.....	.....
	.....	.....

Operating data For further data refer to the wiring diagram.

Start-up pressure	p_E bar	.....
Inlet pressure monitoring (setting of inlet pressure switch)	p_{inl} - x	.....
Stop pressure	p_A bar	.....
Inlet pressure	p_{inl} [bar]	.....
Pre-charge pressure of accumulator	$p_{pre\text{-}charge}$ [bar]	.....

The operator or operator's representative herewith confirms to have received instructions on how to operate and service the pressure booster system. The relevant circuit diagrams and operating instructions have been handed over.

Non-conformities found during commissioning	**Deadline for remedial action**
Non-conformity 1	.....
.....	.....
.....	.....
.....	.....

Name of KSB representative	Name of purchaser or representative
.....	.....
Place	**Date**
.....	.....

Index

A
Access levels 36, 42
Arrow keys 32, 33, 40, 41
Automation 15

C
Certificate of Decontamination 63
Commissioning/start-up 25

D
Design 15
Designation 14
Disposal 13
Drive 15
Dry running protection 25
    Connecting the dry running protection device 24

E
Energy-saving mode 48
Escape key 32, 40
Event of damage 6

F
Faults
    Causes and remedies 53, 55

G
Graphical control panel 39
Graphical display 39

H
Help key 40

I
Installation 15
Installation at site 19
Intended use 8

K
Key to safety symbols/markings 7

L
LED display 38, 46

M
Main screen 31
Maintenance work 50

N
Name plate 14

O
OK key 32, 33, 40, 41
Operating limits 8
Operating values for input and output signals 42
Other applicable documents 6

P
Partly completed machinery 6
Personnel 8

Q
Qualification 8

R
Return to supplier 12

S
Safety 8
Safety awareness 9
Scope of supply 17
Service interface 38, 46
Standard control panel 30

T
Traffic light 38, 46

W
Warnings 7
    Graphical control panel 38, 47
Warranty claims 6

1953.81/04-EN

KSB SE & Co. KGaA
Johann-Klein-Straße 9 • 67227 Frankenthal (Germany)
Tel. +49 6233 86-0
www.ksb.com