BACnet MS/TP Gateway

For Calio

Supplementary Operating Manual

Legal information/Copyright

Supplementary Operating Manual BACnet MS/TP Gateway

Original operating manual

All rights reserved. The contents provided herein must neither be distributed, copied, reproduced, edited or processed for any other purpose, nor otherwise transmitted, published or made available to a third party without the manufacturer's express written consent.

Subject to technical modification without prior notice.

© KSB SE & Co. KGaA, Frankenthal 11/04/2018

Contents

1 General ... 4

2 Storage ... 5

3 Description ... 6

3.1 Compatibility ... 6

3.2 General description ... 6

3.3 Commissioning ... 6

3.3.1 Setting jumpers ... 8

3.3.2 DIL switch ... 8

3.3.3 Back-up battery ... 8

3.3.4 Error code ... 9

3.3.5 Technical data ... 9

4 Related Documents ... 11

4.1 Terminal diagram ... 11

5 EU Declaration of Conformity ... 12

1 General

This supplementary operating manual accompanies the installation/operating manual. All information contained in the installation/operating manual must be observed.

Table 1: Relevant operating manuals

Type series	Reference number of the operating/installation manual
Calio	1157.82

Manufacturer's product literature

For accessories and/or integrated machinery components observe the relevant manufacturer's product literature.

2 Storage

If the ambient conditions for storage are met, the accessories will give reliable service even after a prolonged period of storage. If stored properly, the product will be protected for a maximum of 12 months.

Table 2: Ambient conditions for storage

Ambient condition	Value
Relative humidity	85 % max. (non-condensing)
Ambient temperature	-10 °C to +70 °C

1. Store the device in dry conditions, if possible in its original packaging.
2. Store the device in a dry room in which the atmospheric humidity is maintained at a constant level (as far as this is possible).
3. Prevent excessive fluctuations in atmospheric humidity.

3 Description

3.1 Compatibility

The BACnet PICO Modbus gateway is used to integrate Calio pumps in the BACnet MS/TP network. Communication with the BACnet MS/TP gateway takes place via the Modbus interface (COM) at the pump. Do not change the default Modbus settings of the pump.

The gateway can only be used as a master on the BACnet MS/TP network.

NOTE

Only one Calio pump can be connected via each BACnet MS/TP gateway.

3.2 General description

The device is configured with the following settings at delivery:

Device ID	247000 + gateway serial number
Master node address	1
MS/TP baud rate	38400

The default device ID of the gateway used to identify the device on the BACnet network is created based on the sum total of 247000 (fixed value) and the last 3 digits of the device's serial number.
Example: 247000 + SN1220M0**010** = 247010
The serial number is located on the side of the housing.

The device ID can be changed during operation via BACnet.

NOTE

The master node address (HW address) must be set differently for all devices on the BACnet network.

The master node address can be set using DIP switches. (⇨ Section 3.3.2, Page 8)

3.3 Commissioning

The MS/TP baud rate and master node address are set via a DIL switch on the printed circuit board. Open the housing to change the baud rate or master note address. Remove the printed circuit board.

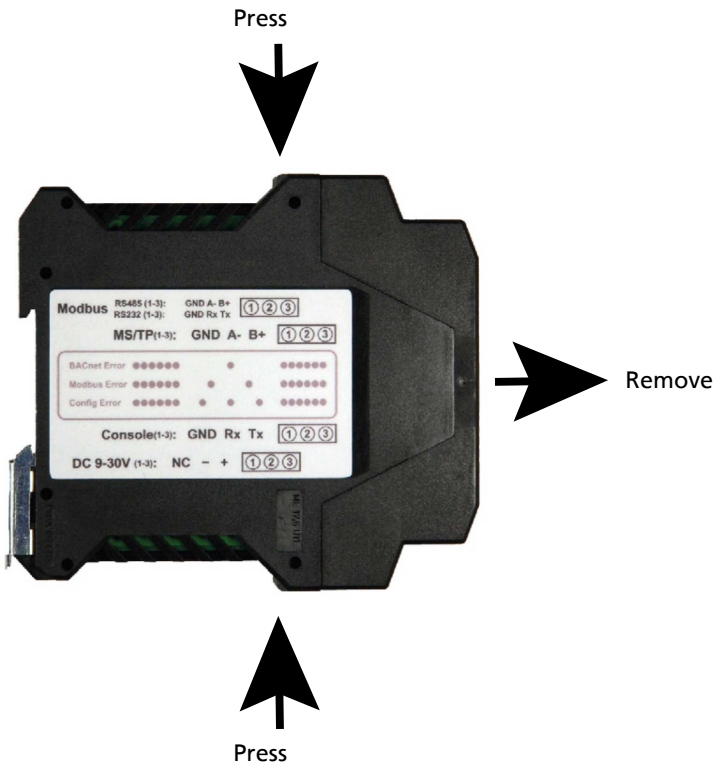

Fig. 1: Side view of BACnet MS/TP gateway

	⚠ DANGER **Live voltage** Danger to life! ▹ Only remove the printed circuit board when de-energised.

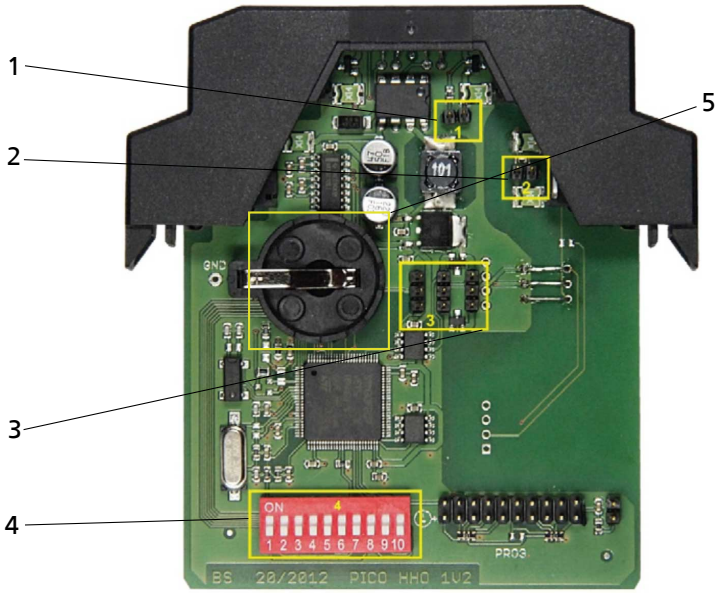

Fig. 2: Removed electronics

1	MS/TP bus terminator jumper (must be terminated at the last station/ subscriber)
2	Modbus bus terminator jumper (not terminated at delivery)
3	RS232/RS485 mode Modbus (already set to RS485 at delivery)

4	BACnet parameter DIL switch
5	Back-up battery

3.3.1 Setting jumpers

Only jumper 1 (BACnet MS/TP bus terminator) typically must be set, if required, during commissioning.

3.3.2 DIL switch

Fig. 3: DIL switch 4

DIP switches 1 to 7 code the master node address, and DIP switches 8 to 10 code the baud rate in the BACnet MS/TP network.
The values are binary coded from right to left.

Table 3: DIP switches for master node addressing

DIP switches							Master node address
1	**2**	**3**	**4**	**5**	**6**	**7**	
0	0	0	0	0	0	1	1
0	0	0	0	0	1	0	2
0	0	0	0	1	0	0	4
0	0	0	1	0	0	0	8
0	0	1	0	0	0	0	16
0	1	0	0	0	0	0	32
1	0	0	0	0	0	0	64

The master node address can be set from 1 to 127 using the DIP switches. It may be necessary to activate several switches to obtain the required address.

NOTE

Master node address 0 is invalid and deletes the current configuration on the gateway.

Table 4: DIP switches for setting the baud rate

DIP switches			Baud rate
8	**9**	**10**	
0	0	0	4800
0	0	1	9600
0	1	0	19200
0	1	1	38400
1	0	0	56700
1	0	1	76800
1	1	0	115200
1	1	1	230400

The baud rate for the BACnet MS/TP network is set to 38400 by default.

3.3.3 Back-up battery

Insert battery of type CR2032 with the positive terminal pointing upwards. The battery buffers the data and the real-time clock of the gateway during a power interruption.

	CAUTION
	Operation without back-up battery System malfunction! ▹ Never operate the device without a back-up battery.

3.3.4 Error code

In the event of a malfunction, the red LED indicates the respective operating condition. If no malfunctions are present, the red LED illuminates continuously. Otherwise, there are 3 fault statuses that are displayed with the following flash codes:

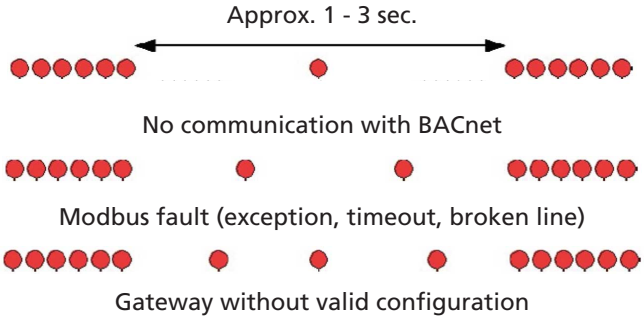

When Modbus communication between the gateway and pump is interrupted, the gateway automatically attempts to re-establish the connection every 3 minutes.

3.3.5 Technical data

Characteristic	Value
Power supply	9 - 30 V DC, approx. 20 mA at 24 V DC
Enclosure	IP20
Housing design	DIN rail assembly
Weight	Approx. 0.1 [kg]
Dimensions	W x H x D: 18 x 90 x 115 [mm]

Table 5: Object list

Type-Instance	Object name	Value	Read/Write	Description
AI-1	Backup_Battery	[V]	R	Replace battery on falling below 2.0 V
AI-2	Calio_Head	[m]	R	Head
AI-3	Calio_Flow	[m^3/h]	R	Flow rate
AI-4	Calio_Speed	[rpm]	R	Speed
AI-5	Calio_OpHours	[h]	R	Operating hours
AI-6	Calio_Power	[W]	R	Power
AI-7	Calio_PumpLoad	[%]	R	Load between 0-100 %
AV-1	Calio_Setpoint	[%]	R/W	Setpoint between 0-100 %
BI-1	Calio_FaultE01	Normal / Fault	R	Temperature limit
BI-2	Calio_FaultE02	Normal / Fault	R	Overcurrent
BI-3	Calio_FaultE03	Normal / Fault	R	Internal fault
BI-4	Calio_FaultE04	Normal / Fault	R	Rotor locked
BI-5	Calio_FaultE05	Normal / Fault	R	Overload / adjusted speed
BI-6	Calio_FaultE06	Normal / Fault	R	Supply voltage too high/low
BI-7	Calio_FaultE08	Normal / Fault	R	Motor fault
BI-8	Calio_PumpStatus	Operate / Stop	R	Status
BV-1	Calio_StartStop	Start / Stop	R/W	Switch Start/Stop

Type-Instance	Object name	Value	Read/Write	Description
DEV-xxxxxx	Device_xxxxxx	-	R	KSB Calio BACnet
FI-1	Config File CSV	-	R/W	CSV Config File ASCII plain text
FI-2	Config Data BIN LHZ	-	R	BINARY DATA file compressed
FI-3	Config Data SRAM	-	R	SRAM DATA buffer
FI-4	P-BASIC File LHZ	-	R	Pico BAS program file compressed
FI-5	P-BASIC File	-	R/W	Pico program file
MI-1	Modbus_Status	Online / Error	R	FP:19200,'E',8,1,'B',1000,1000
PRG-1	P-BASIC Program	Running / Halted	R/W	KSB Calio adaption (c) V20150805 HHO-uha
MV-1	Calio_OpMode	Eco-Mode Const-Pr Propor-Pr Boost	R/W	Selecting the operating mode

All describable properties (see PICs) with the exception of PresentValue are permanently saved in the gateway's flash memory.

To ensure that values are written to the pump as required, PRG-1 P-Basic Program must display the value "Running".
AV-1 Calio_Setpoint, BV-1 Calio_Start/Stop and MV-1 Calio_OpMode can only write values to the pump if Modbus is activated at the pump.
The gateway checks this periodically every 3 minutes.

4 Related Documents

4.1 Terminal diagram

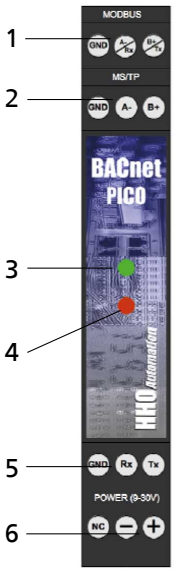

Fig. 4: Terminal diagram

1	Modbus RTU terminals
2	BACnet MS/TP terminals
3	Status, BACnet communication
4	Status, operation or fault
5	Service terminal terminals
6	Power supply 9 - 30 V DC

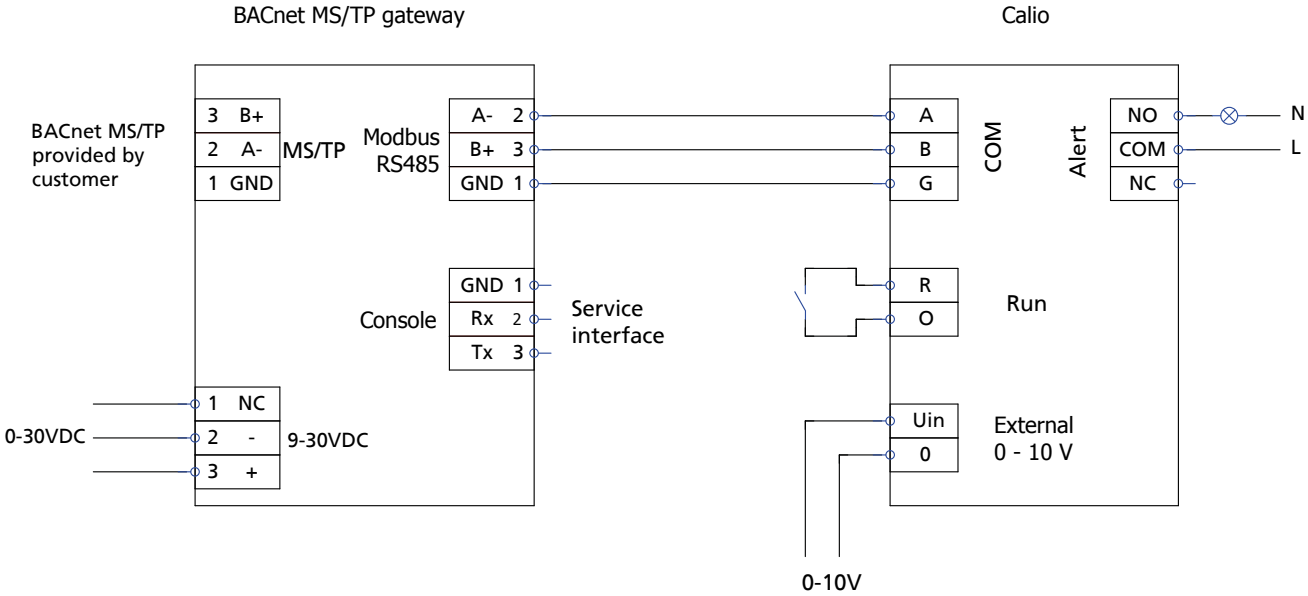

Fig. 5: BACnet MS/TP gateway

NOTE

Always wire only one Calio pump to the gateway in a point-to-point connection.

5 EU Declaration of Conformity

Manufacturer: **KSB SE & Co. KGaA**
Johann-Klein-Straße 9
67227 Frankenthal (Germany)

The manufacturer herewith declares that **the product**:

BACnet MS/TP gateway

Serial number range: 2018w01 to 2019w52

- is in conformity with the provisions of the following Directives as amended from time to time:
  - Electromagnetic Compatibility Directive 2014/30/EU

The EU Declaration of Conformity was issued in/on:

Frankenthal, 1 February 2018

Joachim Schullerer
Head of Product Development Pump Systems and Drives
KSB SE & Co. KGaA
Johann-Klein-Straße 9
67227 Frankenthal

1157.87/04-EN

KSB SE & Co. KGaA
Johann-Klein-Straße 9 • 67227 Frankenthal (Germany)
Tel. +49 6233 86-0
www.ksb.com